Pressure Measurement Solutions

The Instrumentation Company

NOSHOK INCORPORATED

Dial Indicating

Digital

Differential

& Sanitary

Gauges

Diaphragm Seals

& Accessories

NOSHOK is built on a foundation of commitment to our customers and dedication to providing the highest level of service and quality in the industry. We take that responsibility very seriously, and those values are integrated into every product we sell and every facet of our business. If you choose to do business with us, you can expect to be our number one priority.

THE NOSHOK DIFFERENCE:

- Personal, immediate Customer Service
- Dedicated to every customer's satisfaction equally
- Independently owned and operated
- Top of the line product workmanship
- Creative, personalized solutions designed to fit your specific needs

This dedication to quality and customer satisfaction has endured for over 40 years, and has extended to all of our pressure, level, temperature and force measurement products, along with our needle and manifold valves.

This catalog presents our full line of Pressure Measurement Solutions. If you need personal assistance in solving your own unique pressure measurement challenge, please feel free to contact us at 440.243.0388.

Thank you for choosing NOSHOK!

James B. Cole
Chief Executive Officer

NOSHOK Corporate Headquarters

Your Single Source Instrumentation Company

NOSHOK is a member and actively supports:

FCI Fluid Controls Institute, Inc. THE FPDA MOTION & CONTROL NETWORK ASME

NOSHOK is an ISO 9001:2008 registered company

TABLE OF CONTENTS

The Instrumentation Company
NOSHOK INCORPORATED

Warranty Information
Dry Pressure Gauges

Three Year Warranty applies to:

- 1000 Series Digital Gauge

One Year Warranty applies to:

- 100, 200, 400, 640, 740, and 800 Series Dry Gauges
- 10 and 20 Series Dry Sanitary Gauges
- 1000, 1100, 1200, and 1300 Series Dry Differential Gauges

NOSHOK warrants these products:

- To be free from defects in material and workmanship
- To remain within catalogued accuracy specifications
- To operate within the catalogued performance specifications

Limitations which apply are:

- Bourdon tube pressure gauges must be used within their calibrated maximum range to prevent damage
- The pressure gauges must be operated within the following working pressure limits:
    - o Dynamic Pressure application, 60% of the dial range
    - o Static Pressure applications, where no sharp fluctuations occur, 90% of the dial range
- The gauges must be operated within specified ambient temperature ranges

Determination of gauge failures will be made by NOSHOK, Inc., which will use its equipment and personnel or a certified test facility specializing in this type of evaluation and determination. Gauge failures determined to be caused by over-range, incompatibilty with environment or product media and abuse will not be considered under this warranty. NOSHOK, Inc. will, at its discretion, repair or replace the working parts of the damaged gauge without cost to the customer. This written warranty applies only to the NOSHOK gauges referenced in the first paragraph of this warranty, sold by NOSHOK, Inc. and its authorized distributors.

CAUTION:

Operating conditions including, but not limited to, system pressure, media compatibility and ambient conditions must be considered when selecting gauges and accessories, improper selections and use of gauges could possibly cause gauge failure and lead to possible property damage or personal injury. Refer to the American National Standard ANSI B40.1 for the correct selection and use of gauges. A copy of this standard may be obtained from the American Society of Mechanical Engineers, United Engineering Center, 345 East 47th Street, New York, NY 10017.

In keeping with and for purposes of product and/or manufacturing process improvements, NOSHOK, Inc. reserves the right to make design changes without prior notice.

Warranty Information
Liquid Filled Pressure Gauges

Three Year Warranty applies to:

- 300, 500, 660, 760, and 900 Series Liquid Filled Gauges
- 10 and 20 Series Liquid Filled Sanitary Gauges
- 1000, 1100, 1200, and 1300 Series Liquid Filled Differential Gauges

NOSHOK warrants these products:

- To be free from defects in material and workmanship
- To remain within catalogued accuracy specifications
- To maintain the integrity of the hermetically sealed case, therefore preventing leakage
- To operate within the catalogued performance specifications

Limitations which apply are:

- Bourdon tube pressure gauges must be used within their calibrated maximum range to prevent damage
- The pressure gauges must be operated within the following working pressure limits:
    - o Dynamic Pressure application, 60% of the dial range
    - o Static Pressure applications, where no sharp fluctuations occur, 90% of the dial range
- The gauges must be operated within specified ambient temperature ranges

Determination of gauge failures will be made by NOSHOK, Inc., which will use its equipment and personnel or a certified test facility specializing in this type of evaluation and determination. Gauge failures determined to be caused by over-range, incompatibilty with environment or product media and abuse will not be considered under this warranty. NOSHOK, Inc. will, at its discretion, repair or

replace the working parts of the damaged gauge without cost to the customer. This written warranty applies only to the NOSHOK gauges referenced in the first paragraph of this warranty, sold by NOSHOK, Inc. and its authorized distributors.

CAUTION:

Operating conditions including, but not limited to, system pressure, media compatibility and ambient conditions must be considered when selecting gauges and accessories, improper selections and use of gauges could possibly cause gauge failure and lead to possible property damage or personal injury. Refer to the American National Standard ANSI B40.1 for the correct selection and use of gauges. A copy of this standard may be obtained from the American Society of Mechanical Engineers, United Engineering Center, 345 East 47th Street, New York, NY 10017.

WARNING:

Glycerine or silicone could result in a spontaneous chemical reaction or explosion when combined with strong oxidizing agents including, but not limited to, chlorine, oxygen, hydrochloric or nitric acid, and hydrogen peroxide. Do not use glycerine or silicone filled gauges or accessories in these types of service. Consult factory for application assistance.

In keeping with and for purposes of product and/or manufacturing process improvements, NOSHOK, Inc. reserves the right to make design changes without prior notice.

Warranty Information
Diaphragm Seals & Accessories

One Year Warranty applies to:

- Diaphragm Seals
- Pressure Gauge Options & Accessories
  - o Panel Mounting/Flanges
  - o Cases & Cover Rings
  - o Lenses
  - o Maximum Indicating Pointers (MIP)
  - o Set Pointers (SP)
  - o Rubber Case Protectors (RCP)
  - o Orifices
  - o Recalibrators
  - o Overpressure Protection
  - o Ammonia Refrigeration Gauges
  - o Liquid Filling Options
  - o Special Connections
  - o Reid Vapor Test Gauges
  - o Receiver Gauges
  - o Metric Dials & Customized Special Dials
  - o Certified Calibration
  - o Carrying Case for 800 Series
- Pressure Snubbers
  - o Piston Type
  - o Sintered
- Steam Syphons
- Swivel Adapters
- Magnetic Spring Contact Switch (MSCS)

NOSHOK warrants these products:

- To be free from defects in material and workmanship
- To remain within catalogued accuracy specifications
- To operate within the catalogued performance specifications

Limitations which apply are:

These units must be operated within the catalogued environmental and application parameters. Determination of failure will be made by NOSHOK, Inc.'s equipment and personnel or a certified test facility specializing in this type of evaluation.

Standard

100 SERIES

- High quality dry gauges for reliable service on applications not corrosive to brass
- Vacuum and compound through 15,000 psi
- 1-1/2, 2, 2-1/2, 4 inch sizes – bottom, back, left and right side connections
- Dry, ABS case (steel, chrome or stainless steel optional)
- All brass or brass with Delrin® internals
- Panel Mount Clamp and Front Flange mounting
- Standard UV resistant dials are dual scale in psi and kPa (kilopascals); dual scale psi/bar and psi/kg/cm² are available in most popular ranges
- Stock availability

OPERATING SPECIFICATIONS

1. Working Pressure Limitations

a. Dynamic Pressure
The working pressure should be limited to 60% of the dial range.

b. Static Pressure
The working pressure, where no sharp fluctuations occur, should be limited to 90% of the dial range

2. Ambient Temperature
0°F to 140°F (-18°C to 60°C)

3. Media Temperature
-4°F to 140°F (-20°C to 60°C)

APPLICATIONS

- Hydraulics
- Pneumatics
- Petrochemical
- Medical
- Food
- Pharmaceutical
- Most industrial and commercial applications

ACCURACY

- 1-1/2, 2 and 2-1/2 Inch 100 Series Gauges: ±2.5%
- 4 Inch 100 Series Gauges: ±1.5%

	MODELS	SPECIFICATIONS
Case	15-100, 15-110, 20-100, 20-110, 20-148, 25-100, 40-100	ABS (Acryl Nitril Butadien Styrol)
	15-120, 20-120, 25-120	Black painted steel with chrome triangular bezel and U-Clamp
Bezel	15-110, 20-110, 25-110	Built-in bezel, molded as an integral part of the case for ease of panel mounting.
	15-120, 20-120, 25-120	Chrome plated steel triangular bezel
Lens	15-100, 15-110, 15-120, 20-100, 20-110, 20-120, 20-148, 25-100, 25-110, 25-120, 40-100	Clear front Plexiglass™
Bourdon Tube	15-100, 15-110, 15-120, 20-100, 20-120, 20-110, 20-148, 25-100, 25-120, 25-110, 40-100	Phosphor bronze
Connection	15-100, 15-110, 15-120, 20-100, 20-110	1/8″ NPT brass
	20-148	1/8″ NPT/10-32 female brass
	20-100, 20-110, 20-120, 25-100, 25-110, 25-120, 40-100	1/4″ NPT brass
Movement	15-100, 15-110, 15-120, 20-100, 20-110, 20-120, 20-148, 25-100, 25-110, 25-120, 40-100	Brass & Nylon, or All-Brass with highly polished bearing surfaces
Accuracy	15-100, 15-110, 15-120, 20-100, 20-110, 20-120, 20-148, 25-100, 25-110, 25-120,	± 2.5% Full Scale ASME grade B
	40-100	± 1.5% Full Scale ASME grade A
Pointer	15-100, 15-110, 15-120, 20-100, 20-120, 20-110, 20-148,25-100, 25-110, 25-120, 40-100	Molded plastic
Dial	15-100, 15-110, 15-120, 20-100, 20-110, 20-120, 20-148, 25-100, 25-110, 25-120, 40-100	White background with black psi scale and red kPa scale. UV resistant

For details on accuracy/standard dial configuration and dial layouts, see pages 74-78

ORDERING INFORMATION

SERIES	**100**							
SIZE	**15**	1-1/2 Inch	**20**	2 Inch	**25**	2-1/2 Inch	**40**	4 Inch
CASE TYPE	**100**	ABS, Bottom Connection	**120**	Steel Case Panel Mount				
	110	ABS, Back Connection	**148**	Square ABS, Panel Mount (2″ only)				
PRESSURE RANGES	**30 ″ Vac**	-30 inHg vacuum to 0	**30/300**	-30 inHg to 0 to 300 psi	**200**	0 psi to 200 psi	**2000**	0 psi to 2000 psi
	30/15	-30 inHg to 0 to 15 psi	**15**	0 psi to 15 psi	**300**	0 psi to 300 psi	**3000**	0 psi to 3000 psi
	30/30	-30 inHg to 0 to 30 psi	**30**	0 psi to 30 psi	**400**	0 psi to 400 psi	**5000**	0 psi to 5000 psi
	30/60	-30 inHg to 0 to 60 psi	**60**	0 psi to 60 psi	**600**	0 psi to 600 psi	**6000**	0 psi to 6000 psi
	30/100	-30 inHg to 0 to 100 psi	**100**	0 psi to 100 psi	**1000**	0 psi to 1000 psi	**10000**	0 psi to 10000 psi
	30/160	-30 inHg to 0 to 160 psi	**160**	0 psi to 160 psi	**1500**	0 psi to 1500 psi	**15000**	0 psi to 15000 psi
	30/200	-30 inHg to 0 to 200 psi		Other ranges available on request				
SCALE OPTION	**psi**	psi single scale	**psi/kPa**	psi/kPa dual scale	**psi/kg/cm²**	psi/kg/cm² dual scale	**psi/bar**	psi/bar dual scale
				Other scales available on request				
CONNECTION SIZE	**1/8**	1/8″ NPT	**7/16**	7/16-20 SAE #4	**1/4**	1/4″ NPT		
OPTIONS	**PMC**	Panel mount clamp	**SSC**	Stainless steel case	**LL**	Lexan® Lens	**ST**	Stainless steel tagging
	SSB	Polished Stainless steel bezel	**CRC**	Chrome case	**GL**	Glass lens*	**CPO**	Brass Sintered orifice 20 micron
	BLRF	Black rear flange	**FAC**	Flat sided ABS case	**SGL**	Safety glass lens*	**BP1**	Brass press fit orifice 0.1 mm
	BLFF	Black front flange – ABS case	**BCR**	Black cover ring**	**HL**	Homalite lens*	**BP3**	Brass press fit orifice 0.3 mm
	CFF	Chrome front flange – ABS case	**SSCR**	Stainless steel cover ring**	**SP**	Red set pointer**	**BP8**	Brass press fit orifice 0.8 mm
	SBFF	Black front flange – steel case	**CCR**	Chrome cover ring**	**MIP**	Maximum indicating pointer		
	SCFF	Chrome front flange – steel case	**PCCR**	Polished Chrome cover ring**	**SDM**	Silicone dampened movement		
	BSC	Black steel case	**CAR**	Chrome adapter ring*	**LM**	Laser marking		

Please consult your local NOSHOK Distributor or NOSHOK, Inc. for availability and delivery information.

NOTE: Refer to 100 Series Options & Accessories chart on page 64 for availability by model number.

* A steel, stainless or chrome case & cover ring must be additionally ordered when lenses other than Plexiglass™ are utilized on all 100 Series models.

** Only 110 Models require a steel, stainless or chrome case & cover ring to be additionally ordered when utilizing a set pointer or cover ring. Please consult factory when a set pointer is to be utilized on a 120 Model.

EXAMPLE

20-110 - 100 psi - 1/4 - BSC

1. Select model number (size & case type)
2. Select pressure range & scale option
3. Select NPT connection size (if more than one is offered)
4. Select any required accessory or option

OUTLINE DIMENSIONS

15-100

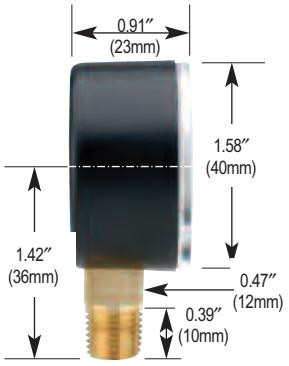

20-100

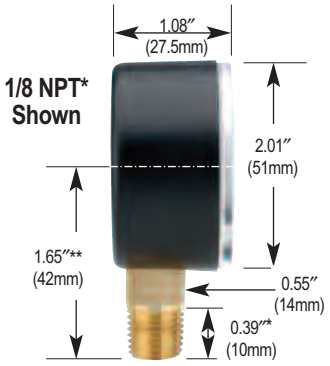

*1/4 NPT 0.51″ (13mm) **1/4 NPT 1.77″ (45mm)

25-100

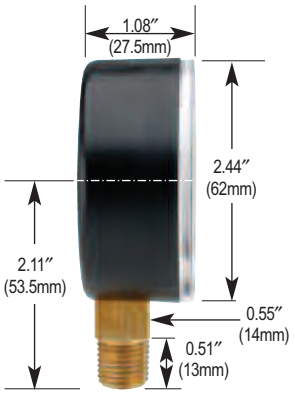

Dimensions

40-100

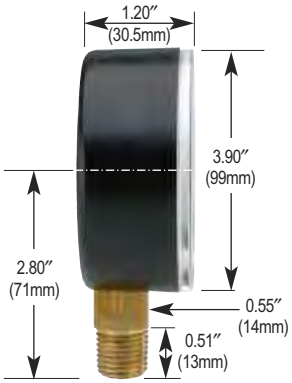

15-110

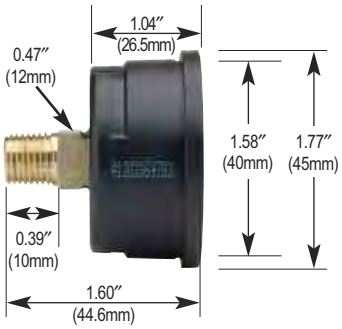

20-110

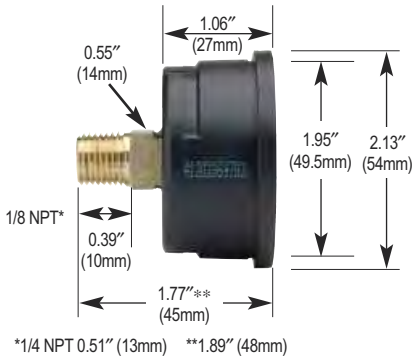

20-148

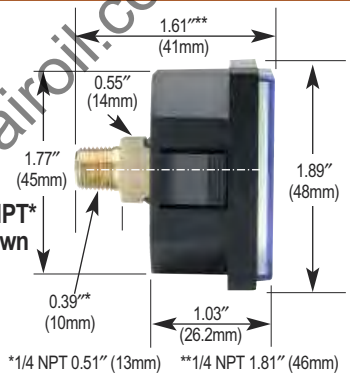

25-110

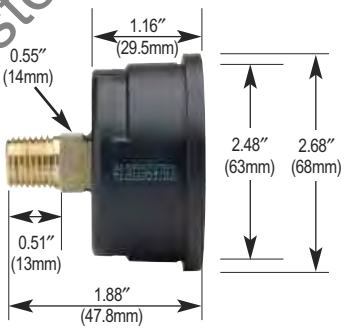

15-110 Front Flange

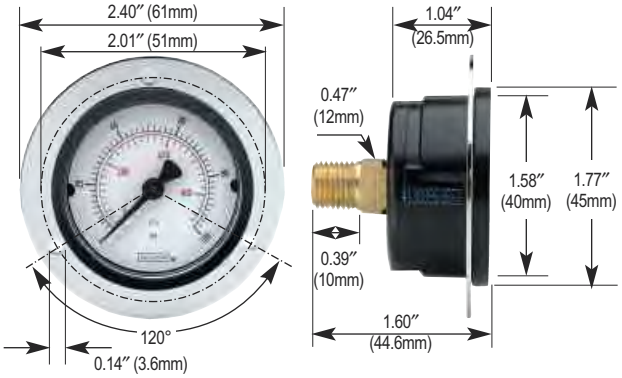

20-110 Front Flange

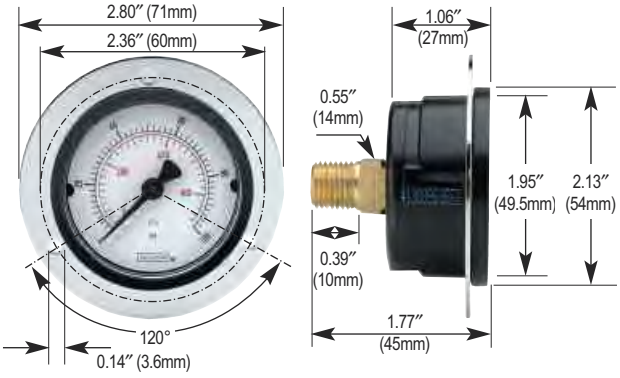

25-110 Front Flange

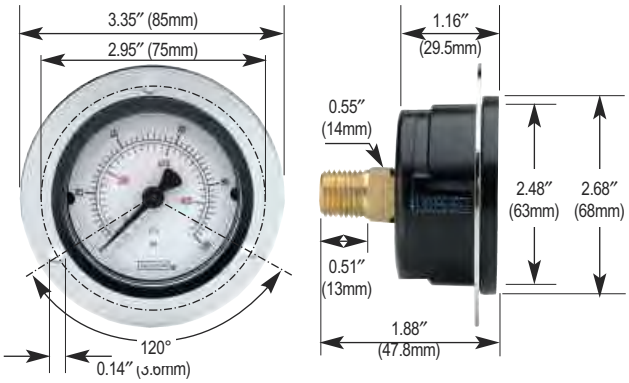

25-100 Rear Flange

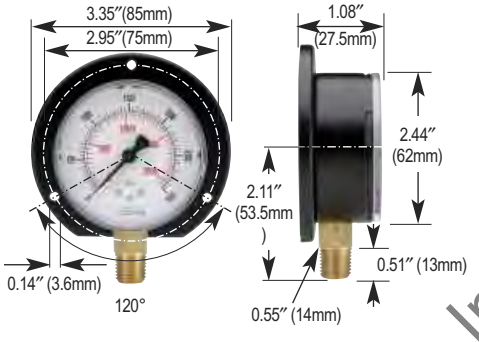

40-100 Rear Flange

15-120 Chrome Triangular Bezel with U-Clamp

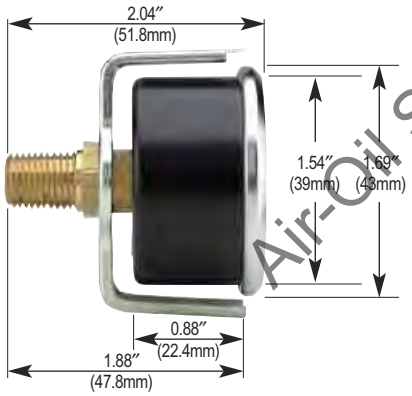

20-120 Chrome Triangular Bezel with U-Clamp

25-120 Chrome Triangular Bezel with U-Clamp

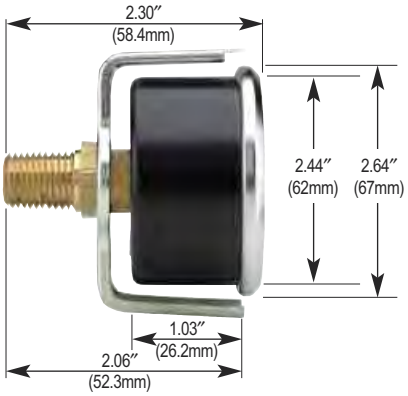

15-110 Panel Mount Clamp

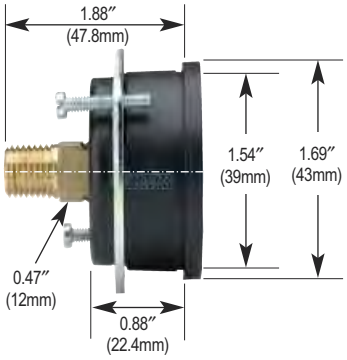

20-110 Panel Mount Clamp

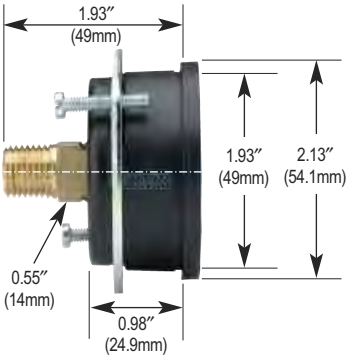

25-110 Panel Mount Clamp

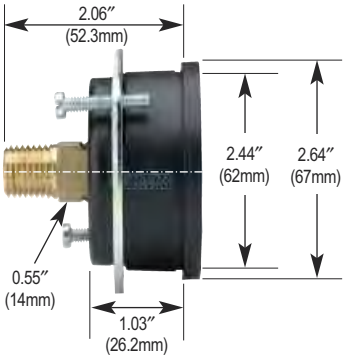

Low Pressure Diaphragm

200 SERIES

- Designed for extremely low pressure and vacuum measurement
- Ultra sensitive copper alloy diaphragm capsules are rated for pressure (or vacuum) as low as 0-10 inches of water and as high as 0-10 psi
- 2-1/2 and 4 inch sizes – bottom and back connections
- Molded Plexiglass™ lenses on 2-1/2 inch size and instrument glass on 4 inch size for strength and clarity
- Standard case on 2-1/2 inch size is black painted steel (optional stainless steel), and stainless steel on 4 inch case
- Phosphor bronze diaphragm capsules are coupled with precision all-brass movements to provide extremely accurate indication
- 25-206 & 25-216 are low pressure diaphragm OEM-Type gauges; they feature a black ABS case and a Copper Beryllium Alloy (CuBe) diaphragm capsule coupled with Cu-Alloy movement for extremely low pressure applications
- 25-200, 25-210 and 40-200 come standard with zero point adjustment
- 25-200 and 25-210 come standard with 2X to 10X overpressure protection based on full scale
- Stock availability

OPERATING SPECIFICATIONS

1. Working Pressure Limitations

a. Dynamic Pressure
The working pressure should be limited to 90% of the dial range.

b. Static Pressure
The working pressure, where no sharp fluctuations occur, should be limited to 100% of the dial range

2. Ambient Temperature
-4°F to 140°F (-20°C to 60°C)

3. Media Temperature
-4°F to 176°F (-20°C to 80°C)

APPLICATIONS

- Medical
- Biomedical
- HVAC
- Gas distribution
- Filtration
- Burner and gas combustion service
- Waste water treatment
- Level indication and filter monitoring
- Everywhere low pressure and vacuum measurement is required

ACCURACY

- 2-1/2 Inch 200 Series Gauges: ±1.5%
- 4 Inch 200 Series Gauges: ±1.0%

	MODELS	SPECIFICATIONS
Case	25-200, 25-210	Black painted steel
	25-206, 25-216, 25-224 zinc plated steel panel mount clamp	Black ABS (Acryl Nitril Butadien Styrol) with 25-224 includes
	40-200	304 Stainless steel
Bezel	40-200	304 Stainless steel
Lens	25-200, 25-206, 25-210, 25-216, 25-224	Clear front Plexiglass™
	40-200	Instrument glass
Diaphragm Capsule	25-200, 25-210, 25-224, 40-200	Phosphor bronze
Connection	25-200, 25-206, 25-210, 25-216, 25-224, 40-200	1/4″ NPT brass
Movement	25-200, 25-210, 25-224, 40-200	Brass and Nickel-Silver with highly polished bearing surfaces
	25-206, 25-216	Cu-Alloy
Accuracy	25-200, 25-210, 25-224	± 1.5% Full Scale ASME grade A
	25-206, 25-216	± 2.5% Full Scale ASME grade B
	40-200	± 1% Full Scale ASME grade 1A
Pointer	25-200, 25-206, 25-210, 25-216, 25-224, 40-200	Black finished aluminum
Dial	25-200, 25-206, 25-210, 25-216, 25-224, 40-200	Aluminum, white background with black markings. Single scale except as noted in the dial configuration chart. UV resistant

For details on accuracy/standard dial configuration and dial layouts, see pages 74-78

ORDERING INFORMATION

SERIES	**200**									
SIZE	**25**	2 1/2 Inch	**40**	4 Inch						
CASE TYPE	**200**	Steel, Bottom Connection (304SS for 4″)			**216**	ABS, Back Connection				
	206	ABS, Bottom Connection			**224**	ABS, Panel Mount				
	210	Steel, Back Connection			**234**	Gas Pressure Test Kit**				
PRESSURE RANGES	**15 inH$_2$O Vac**	15 inH$_2$O to 0 inH$_2$O	**30 inH$_2$O**	0 inH$_2$O to 30 inH$_2$O	**15 oz/in^2**	0 oz/in^2 to 15 oz/in^2	**20 oz/35 inH$_2$O**	0 oz/in^2/inH$_2$O to 20 oz/in^2/inH$_2$O		
	30 inH$_2$O Vac	30 inH$_2$O to 0 inH$_2$O	**60 inH$_2$O**	0 inH$_2$O to 60 inH$_2$O	**30 oz/in^2**	0 oz/in^2 to 30 oz/in^2	**32 oz/55 inH$_2$O**	0 oz/in^2/inH$_2$O to 32 oz/in^2/inH$_2$O		
	60 inH$_2$O Vac	60 inH$_2$O to 0 inH$_2$O	**100 inH$_2$O**	0 inH$_2$O to 100 inH$_2$O	**35 oz/in^2**	0 oz/in^2 to 35 oz/in^2	**3 psi**	0 psi to 3 psi		
	100 inH$_2$O Vac	100 inH$_2$O to 0 inH$_2$O	**160 inH$_2$O**	0 inH$_2$O to 160 inH$_2$O	**60 oz/in^2**	0 oz/in^2 to 60 oz/in^2	**5 psi**	0 psi to 5 psi		
	10 inH$_2$O	0 inH$_2$O to 10 inH$_2$O	**200 inH$_2$O**	0 inH$_2$O to 200 inH$_2$O	**100 oz/in^2**	0 oz/in^2 to 100 oz/in^2	**10 psi**	0 psi to 10 psi		
	15 inH$_2$O	0 inH$_2$O to 15 inH$_2$O	**10 oz/in^2**	0 oz/in^2 to 10 oz/in^2	**160 oz/in^2**	0 oz/in^2 to 160 oz/in^2				
CONNECTION SIZE	**1/4**	1/4″ NPT								
OPTIONS	**BLRF**	Black rear flange	**GL**	Glass lens*	**OP**	Over pressure protection	**CCR**	Chrome cover ring		
	SSRF	304SS rear flange	**SGL**	Safety glass lens*	**SSB-U**	Stainless steel bezel & U clamp	**LM**	Laser marking		
	BLFF	Black front flange	**PL**	Plexiglass™ lens	**BB-U**	Black bezel & U clamp	**ST**	Stainless steel tagging		
	SSFF	304SS front flange	**RL**	Recalibrator lens	**BCR**	Black cover ring	**BP3**	Brass press fit orifice 0.3 mm		
	CFF	Chrome front flange	**SP**	Red set pointer	**SSCR**	Stainless steel cover ring	**BT3**	Brass threaded orifice 0.3 mm		
	SSC	Stainless steel case	**MIP**	Maximum indicating pointer						

Please consult your local NOSHOK Distributor or NOSHOK, Inc. for availability and delivery information.

NOTE: Refer to 200 Series Options & Accessories chart on page 65 for availability by model number.

* A steel, stainless or chrome cover ring must be additionally ordered when lenses other than Plexiglass™ are utilized on all 200 Series models

** Only available in 2 1/2 inch size, 20 oz/35 inH$_2$O

EXAMPLE

25-200 - 30 inH$_2$0 - 1/4 - BP3

1. **Select model number (size & case type)**
2. **Select pressure range**
3. **Connection size**
4. **Select any required accessory or option**

OUTLINE DIMENSIONS

25-200

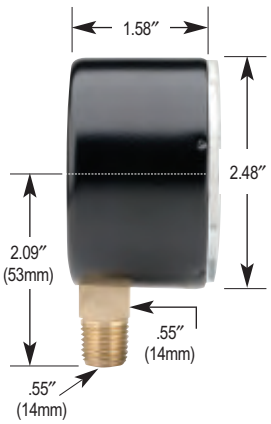

25-206

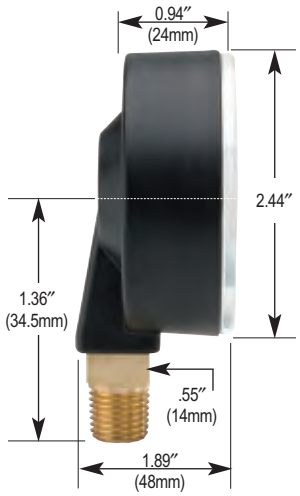

25-210

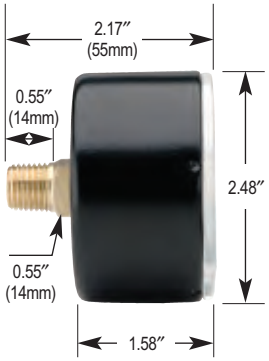

25-216

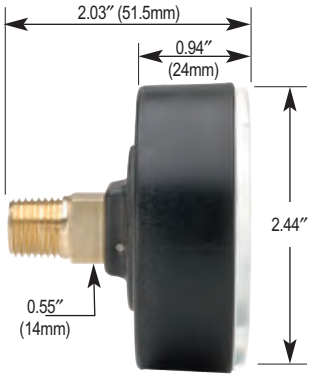

Dimensions

25-210 Front Flange

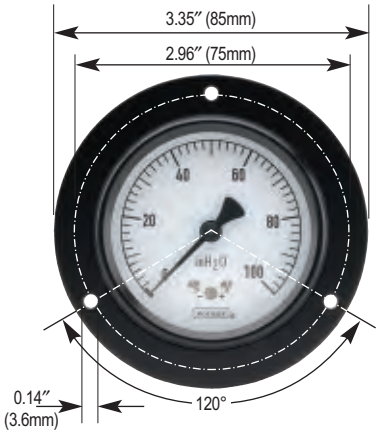

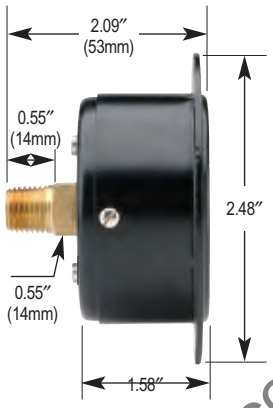

25-200 Rear Flange

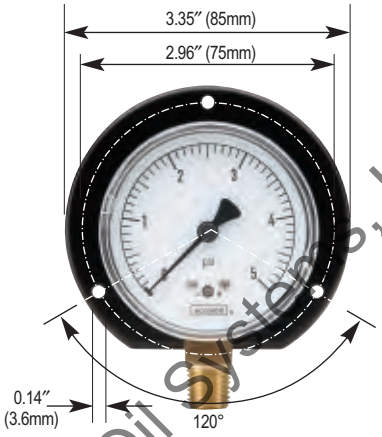

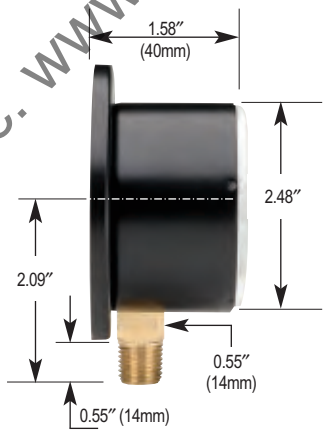

40-200 Rear Flange

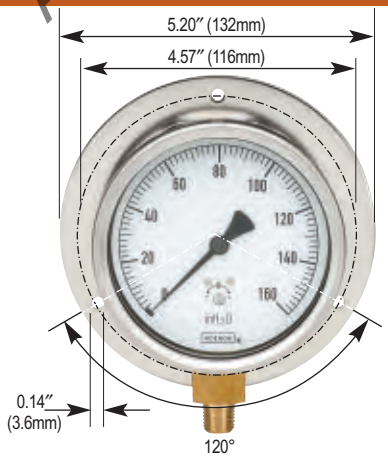

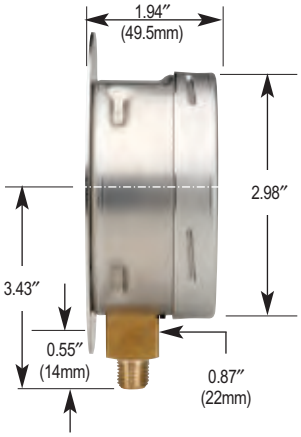

25-210 Triangular Bezel with U-Clamp

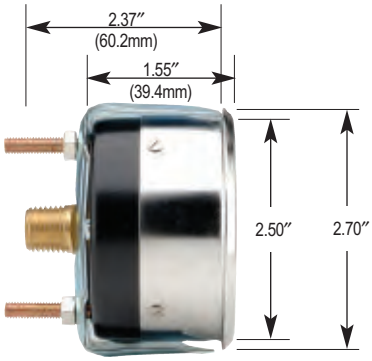

25-224 With Panel Mount Clamp

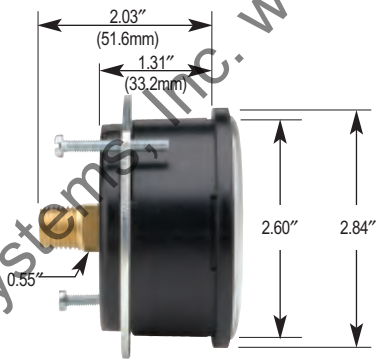

25-234

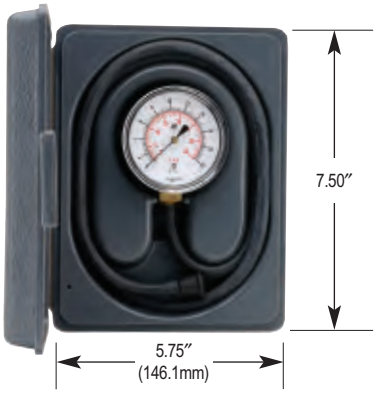

Brass Case Liquid Filled

300 SERIES

- High quality liquid filled gauges designed for durability, accuracy and long life
- Pressure ranges from vacuum through 15,000 psi
- 2-1/2 and 4 inch sizes – bottom or back connected
- Heavy one-piece die casting integrates the case, connection, movement and bourdon tube support into a solid unit to eliminate leakage
- Glycerine fill greatly reduces effects of vibration, pulsation and shock
- Dials are printed with bold UV resistant ink for ease of readability even after years of exposure to direct sunlight
- Stock availability

OPERATING SPECIFICATIONS

1. Working Pressure Limitations

a. Dynamic Pressure
The working pressure should be limited to 60% of the dial range for long service life.

b. Static Pressure
The working pressure, where no sharp fluctuations occur, should be limited to 90% of the dial range

2. Ambient Temperature
0°F to 160°F (-18°C to 71°C)
Please contact us for assistance in selecting the best fill for your application.

3. Media Temperature
-4°F to 140°F (-20°C to 60°C)
Optional temperature ratings available from -40°F to 212°F (-40°C to 100°C)

APPLICATIONS

- Used in demanding applications that are not corrosive to brass, where vibration and pulsation are present

ACCURACY

- 2-1/2 Inch 300 Series Gauges: ±1.5%
- 4 Inch 300 Series Gauges: ±1.0%

	MODELS	SPECIFICATIONS
Case	25 300, 25 310, 40 300, 40 310	Die cast brass Natural brass finish
Cover Ring	25 300, 25 310, 40 300, 40 310	Polished brass
Lens	25 300, 25 310, 40 300, 40 310	Molded Plexiglass™ with O Ring seal
Bourdon Tube	25 300, 25 310, 40 300, 40 310 **(up to 600 psi)**	Phosphor bronze "C" tube
	25 300, 25 310, 40 300, 40 310 **(greater than 600 psi)**	Coiled safety tube
Connection	25 300, 25 310	1/4″ NPT die cast with the case. 7/16″ 20 SAE adjustable type straight thread with Viton O Ring is also available as a stock option on many ranges (4 SAE).
	40 300, 40 310	1/4″ NPT die cast with the case. 1/2″ NPT is available on certain 40 300 ranges as a stock option, and on all other 40 300 and 40 310's as a non stock option.
Movement	25 300, 25 310, 40 300, 40 310	Brass and Nickel Silver with highly polished bearing surfaces
Safety Protection	25 300, 25 310, 40 300, 40 310	Safety relief disc on the top of the case
Accuracy	25 300, 25 310	± 1.5% Full Scale ASME grade A
	40 300, 40 310	± 1% Full Scale ASME grade 1A
Pointer	25 300, 25 310, 40 300, 40 310	Balanced aluminum, black finish
Dial	25 300, 25 310, 40 300, 40 310	Aluminum, white background with black markings. Single scale psi is standard. psi/bar, psi/kPa, or psi/Kg/cm² dual scale are available as stock options. On dual scale dials, the outer scale is psi in black and the inner metric scale is red. UV resistant.
Fill Liquid	25 300, 25 310, 40 300, 40 310	Glycerine and water

For details on accuracy/standard dial configuration and dial layouts, see pages 74-78

ORDERING INFORMATION

SERIES	**300**							
SIZE	**25**	2 1/2 Inch	**40**	4 Inch				
CASE TYPE	**300**	Brass, Bottom Connection	**310**	Brass, Back Connection				
PRESSURE RANGES	**30 ″ Vac**	30 inHg to 0	**30/300**	30 inHg to 0 to 300 psi	**300**	0 psi to 300 psi	**3000**	0 psi to 3000 psi
	30/15	30 inHg to 0 to 15 psi	**15**	0 psi to 15 psi	**400**	0 psi to 400 psi	**5000**	0 psi to 5000 psi
	30/30	30 inHg to 0 to 30 psi	**30**	0 psi to 30 psi	**600**	0 psi to 600 psi	**6000**	0 psi to 6000 psi
	30/60	30 inHg to 0 to 60 psi	**60**	0 psi to 60 psi	**800**	0 psi to 800 psi	**7500**	0 psi to 7500 psi
	30/100	30 inHg to 0 to 100 psi	**100**	0 psi to 100 psi	**1000**	0 psi to 1000 psi	**10000**	0 psi to 10000 psi
	30/160	30 inHg to 0 to 160 psi	**160**	0 psi to 160 psi	**1500**	0 psi to 1500 psi	**15000**	0 psi to 15000 psi
	30/200	30 inHg to 0 to 200 psi	**200**	0 psi to 200 psi	**2000**	0 psi to 2000 psi		
SCALE OPTION	**psi**	psi single scale	**psi/kPa**	psi/kPa dual scale	**psi/kg/cm²**	psi/kg/cm² dual scale	**psi/bar**	psi/bar dual scale
CONNECTION SIZE	**1/4**	1/4″ NPT	**1/2**	1/2″ NPT	**SST**	7/16 20 Adjustable		
OPTIONS	**CFF**	Chrome front flange	**CCR**	Chrome cover ring	**SGO**	Safety Glass overlay	**BT3**	Brass threaded orifice 0.3 mm
	BFF	Brass front flange	**CB-U**	Chrome bezel & u clamp	**AR**	Adapter ring	**BT4**	Brass threaded orifice 0.4 mm
	BLFF	Black front flange	**MIP**	Maximum indicating pointer	**LM**	Laser marking	**BT8**	Brass threaded orifice 0.8 mm
	SSRF	304SS rear flange	**LL**	Lexan lens	**ST**	Stainless steel tagging	**7/16-20**	Straight thread available
	BRF	Brass rear flange	**GLO**	Glass lens overlay				

Please consult your local NOSHOK Distributor or NOSHOK, Inc. for availability and delivery information.

NOTE: Refer to 300 Series Options & Accessories chart on page 65 for availability by model number.

EXAMPLE

40-300 - 3000 psi - 1/2 - BRF

1. **Select model number (size & case type)**
2. **Select pressure range & scale option**
3. **Select connection size (if more than one is offered)**
4. **Select any required accessory or option**

OUTLINE DIMENSIONS

25-300

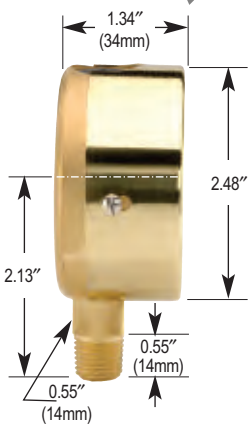

40-300

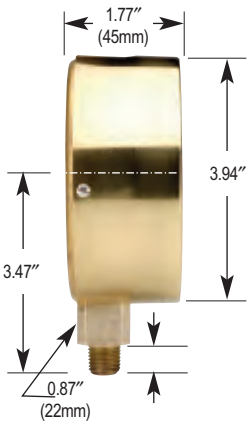

25-310

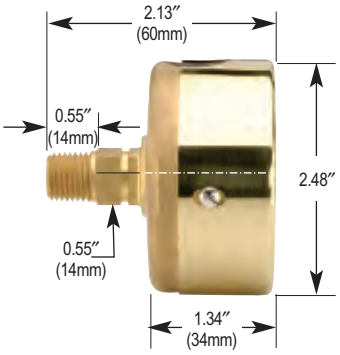

Dimensions

40-310

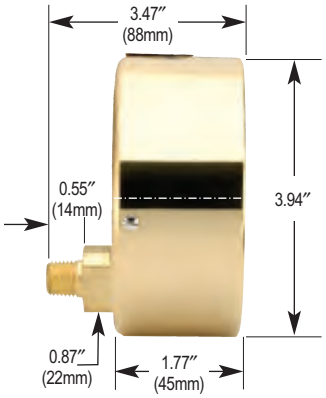

25-300 Front Flange

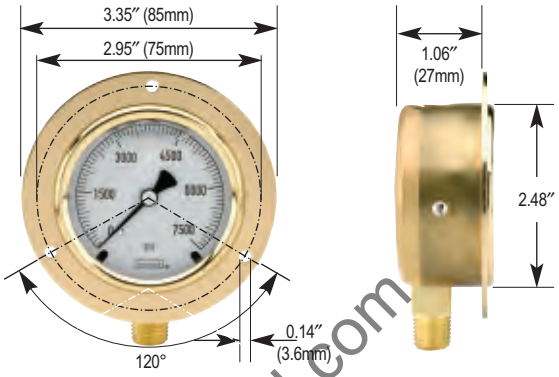

40-300 Front Flange

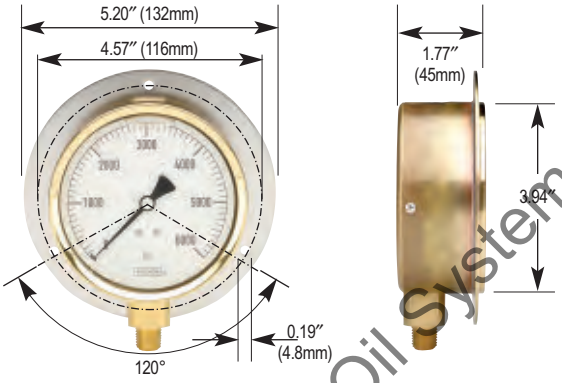

25-310 Front Flange

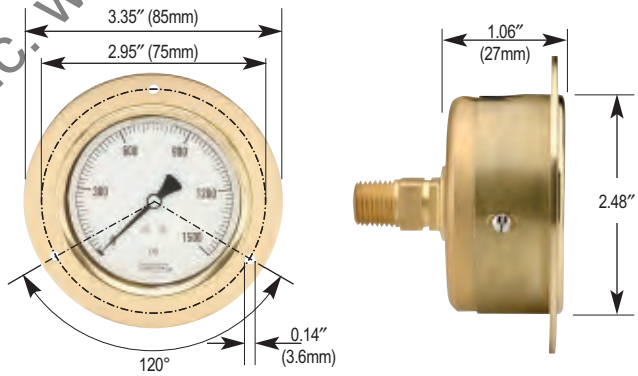

40-310 Front Flange

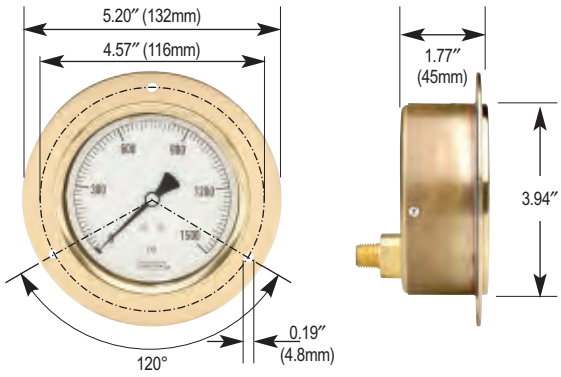

25-300 Rear Flange

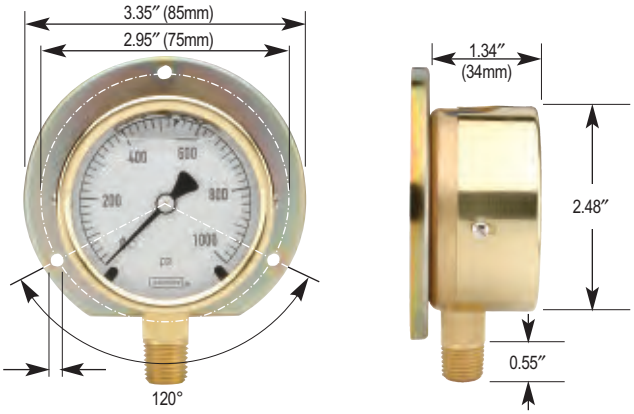

40-300 Rear Flange

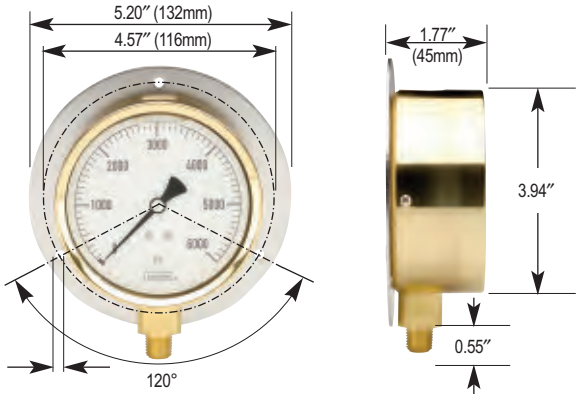

25-310 Rear Flange

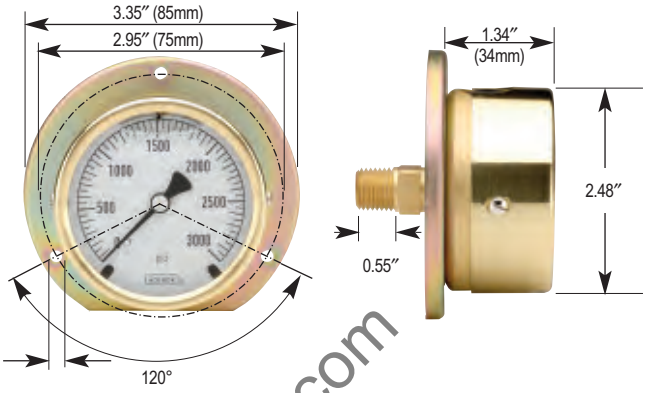

40-310 Rear Flange

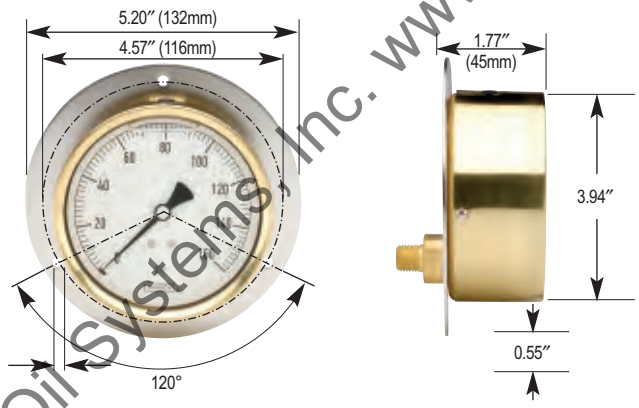

25-310 Chrome Triangular Bezel with U-Clamp

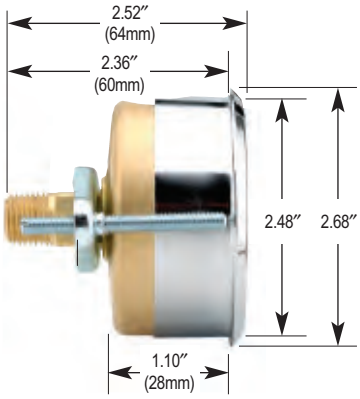

40-310 Chrome Triangular Bezel with U-Clamp

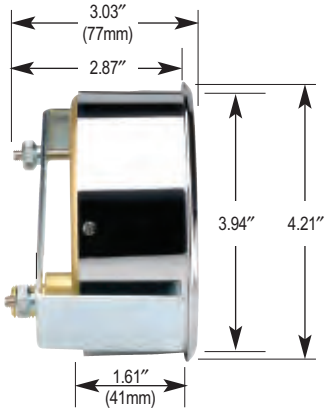

400/500 SERIES

- The ultimate corrosion resistant heavy-duty vacuum and pressure gauges
- **Extreme high pressure** ranges available from vacuum through 100,000 psi
- 1-1/2, 2, 2-1/2, 4 and 6 inch sizes – bottom or back connected
- Cases and polished bezels are constructed of solid 304 Stainless steel, with 316 Stainless steel internals
- Vacuum, compound and zero based ranges
- Bourdon tubes are matched to Stainless steel precision movements and balanced pointers for smooth, accurate indication
- Glycerine filling (in the 500 Series) further enhances gauge life by constantly lubricating the movement and dampening the effects of vibration, pulsation and shock.
- NOSHOK's Agriculture Ammonia Gauges (25-406 and 25-506) feature a nickel-plated brass connection with a 316 Stainless steel Bourdon Tube
- Stock availability

OPERATING SPECIFICATIONS

1. Working Pressure Limitations

a. **Dynamic Pressure**
The working pressure should be limited to 60% of the dial range for long service life.

b. **Static Pressure**
The working pressure, when no sharp fluctuations occur, should be limited to 90% of the dial range.

2. Ambient Temperature

a. **400 Series**
-40°F to 140°F (-40°C to 60°C)

b. **500 Series**
-4°F to 140°F (-20°C to 60°C)
Glycerine Fill
-40°F to 140°F (-40°C to 60°C)
Special Fill

3. Media Temperature

a. **400 Series**
-40°F to 212°F (-40°C to 100°C)
1-1/2″ and 2-1/2″ sizes
-40°F to 392°F (-40°C to 200°C)
4″ and 6″ sizes

b. **500 Series**
-4°F to 212°F (-20°C to 100°C)
Glycerine Fill
-40°F to 212°F (-40°C to 100°C)
Special Fill

APPLICATIONS

- Chemical plants
- Petrochemical refineries
- Pharmaceutical
- Food and beverage processing
- Offshore oil platforms
- Paper mills
- Salt mines
- Fertilizer plants
- Shipboard

ACCURACY

- 1-1/2 inch 400 Series Gauges: ±2.5%
- 2-1/2 inch 400 Series Gauges: ±1.5%
- 4 and 6 inch 400 Series Gauges: ±1.0%
- 2-1/2 inch 500 Series Gauges: ±1.5%
- 4 and 6 inch 500 Series Gauges: ±1.0%

	MODELS	SPECIFICATIONS
Case	15 400, 15 410, 40 400, 40 410, 60 400, 60 410, 60 500, 60 510	304 Stainless steel
	25 400, 25 410, 25 500, 25 510, 40 500, 40 510	Polished 304 Stainless steel
Cover Ring	15 400, 15 410, 25 400, 25 410, 25 500, 25 510, 40 400, 40 410, 40 500, 40 510	Polished 304 Stainless steel
	60 400, 60 410, 60 500, 60 510	Polished 304 Stainless steel bayonet ring
Lens	15 400, 15 410, 40 400, 40 410, 40 500, 40 510	Instrument glass
	25 400, 25 410, 25 500, 25 510	Trogamide
	60 400, 60 410, 60 500, 60 510	Laminated safety glass
Bourdon Tube	15 400, 15 410, 25 400, 25 410, 25 500, 25 510, 40 400, 40 410, 40 500, 40 510, 60 400, 60 410, 60 500, 60 510 **(up to 600 psi)**	316 Stainless steel "C" tube
	25 400, 25 410, 25 500, 25 510, 40 400, 40 410, 40 500, 40 510, 60 400, 60 410, 60 500, 60 510 **(greater than 600 psi)**	Coiled safety tube
Connection	15 400, 15 410	1/8″ NPT, 316 Stainless steel
	25 400, 25 410, 25 500, 25 510	1/4″ NPT, 316 Stainless steel
	40 400, 40 410, 40 500, 40 510, 60 400, 60 410, 60 500, 60 510	1/2″ NPT, 316 Stainless steel. 9/16″ 18 high pressure connections are standard on 0 30,000 PSI and higher
Movement	15 400, 15 410, 25 400, 25 410, 25 500, 25 510	Stainless steel and nylon with highly polished bearing surfaces
	40 400, 40 410, 40 500, 40 510	All Stainless steel with internal zero stop and highly polished bearing surfaces
	60 400, 60 410, 60 500, 60 510	Stainless steel with highly polished bearing surfaces. An internal zero stop is standard.
Safety Protection	25 400, 25 410, 25 500, 25 510	Safety relief disc on the top of the case
	40 400, 40 410, 40 500, 40 510, 60 400, 60 410, 60 500, 60 510	Safety relief disc on the back and top of the case
Accuracy	15 400, 15 410	± 2.5% Full Scale ASME grade B
	25 400, 25 410, 25 500, 25 510	± 1.5% Full Scale ASME grade A
	40 400, 40 410, 40 500, 40 510, 60 400, 60 410, 60 500, 60 510	± 1% Full Scale ASME grade 1A
Pointer	15 400, 15 410	Black finished aluminum
	25 400, 25 410, 25 500, 25 510, 40 400, 40 410, 40 500, 40 510	Balanced aluminum, black finish
	60 400, 60 410, 60 500, 60.510	Balanced micro adjustable aluminum, black finish
Dial	15 400, 15 410	Aluminum, white background with black markings. Single scale psi. UV resistant
	25 400, 25 410, 25 500, 25 510, 40 400, 40 410, 40 500, 40 510, 60 400, 60 410, 60 500, 60 510	Aluminum, white background with black markings. Single scale psi is standard. psi/bar, psi/kPa, or psi/Kg/cm² dual scale are available as stock options. On dual scale dials, the outer scale is psi in black and the inner metric scale is red. UV resistant.
Fill Liquid	25 500, 25 510, 40 500, 40 510, 60 500, 60 510	Glycerine and water

For details on accuracy/standard dial configuration and dial layouts, see pages 74-78

ORDERING INFORMATION

SERIES	**400/500**							
SIZE	**15**	1 1/2 Inch	**25**	2 1/2 Inch	**40**	4 Inch	**60**	6 Inch
CASE TYPE	**400**	All SS, Dry/Fillable, Bottom Connection	**410**	All SS, Dry/Fillable, Back Connection	**506**	Ammonia, Liquid Filled, Bottom Connection		
	401	All SS, Dry, Bottom Connection	**411**	All SS, Dry, Back Connection	**510**	SS Case, Liquid Filled, Back Connection		
	406	Ammonia, Dry/Fillable, Bottom Connection	**500**	SS Case, Liquid Filled, Bottom Connection				
PRESSURE RANGES	**30 ″ Vac**	30 inHg to 0	**15**	0 psi to 15 psi	**600**	0 psi to 600 psi	**10000**	0 psi to 10000 psi
	30/15	30 inHg to 0 to 15 psi	**30**	0 psi to 30 psi	**800**	0 psi to 800 psi	**15000**	0 psi to 15000 psi
	30/30	30 inHg to 0 to 30 psi	**60**	0 psi to 60 psi	**1000**	0 psi to 1000 psi	**20000**	0 psi to 20000 psi
	30/60	30 inHg to 0 to 60 psi	**100**	0 psi to 100 psi	**1500**	0 psi to 1500 psi	**30000**	0 psi to 30000 psi
	30/100	30 inHg to 0 to 100 psi	**160**	0 psi to 160 psi	**2000**	0 psi to 2000 psi	**40000**	0 psi to 40000 psi
	30/160	30 inHg to 0 to 160 psi	**200**	0 psi to 200 psi	**3000**	0 psi to 3000 psi	**60000**	0 psi to 60000 psi
	30/200	30 inHg to 0 to 200 psi	**300**	0 psi to 300 psi	**5000**	0 psi to 5000 psi	**80000**	0 psi to 80000 psi
	30/300	30 inHg to 0 to 300 psi	**400**	0 psi to 400 psi	**6000**	0 psi to 6000 psi	**100000**	0 psi to 100000 psi
SCALE OPTION	**psi**	psi single scale	**psi/kPa**	psi/kPa dual scale	**psi/kg/cm²**	psi/kg/cm2 dual scale	**psi/bar**	psi/bar dual scale
CONNECTION SIZE	**1/4**	1/4″ NPT	**1/2**	1/2″ NPT	**9/16-18**	9/16 18 UNF 3B*		
OPTIONS	**SSFF**	304SS front flange	**SSFR**	304SS flange ring	**SP**	Red set pointer		
	SSRF	304SS rear flange	**FR**	Flange ring	**LM**	Laser marking		
	SSB-U	Stainless steel bezel & U clamp	**AP**	Adjustable pointer	**ST**	Stainless steel tagging		
	SPMC	304SS panel mount clamp	**SGL**	Safety glass lens	**ST5**	Stainless steel threaded orifice 0.5 mm		
	PMC	Steel panel mount clamp	**MIP**	Maximum indicating pointer	**ST8**	Stainless steel threaded orifice 0.8 mm		

Please consult your local NOSHOK Distributor or NOSHOK, Inc. for availability and delivery information.

NOTE: Refer to 400/500 Series Options & Accessories chart on page 66 for availability by model number.
•Connection size for pressures 30,000 psi and above.

EXAMPLE

40-500 - 600 psi - 1/2 - MIP

1. **Select model number (size & case type)**
2. **Select pressure range & scale option**
3. **Select connection size (if more than one is offered)**
4. **Select any required accessory or option**

OUTLINE DIMENSIONS

15-401

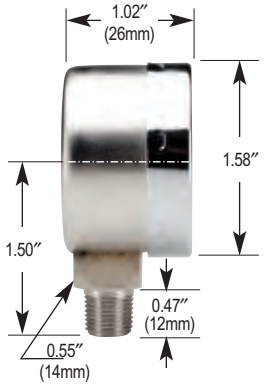

25-400/500

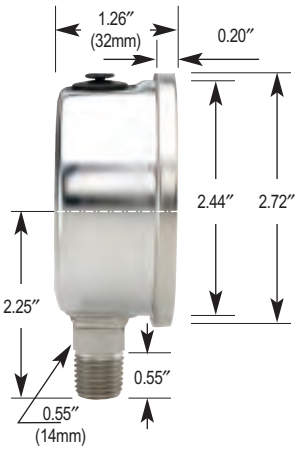

40-400/500

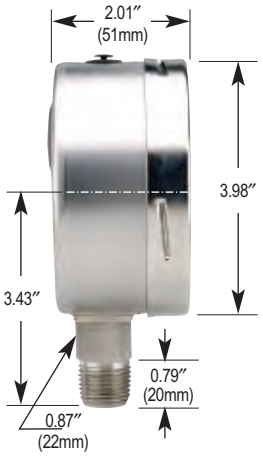

Dimensions

60-400/500

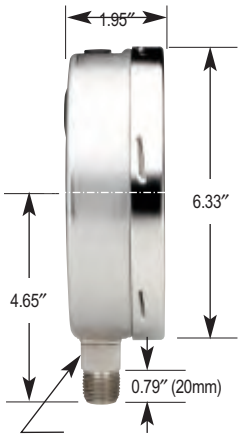

15-411

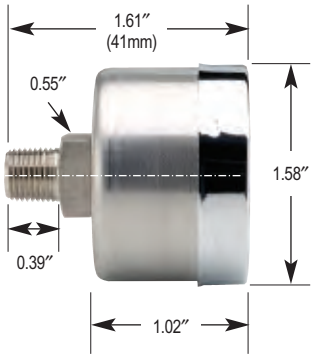

25-410/510

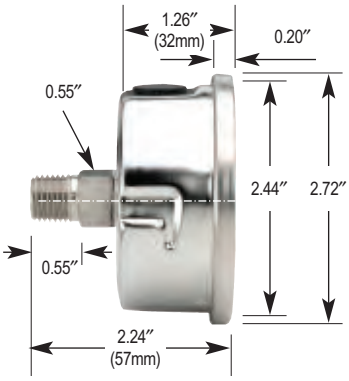

40-410/510

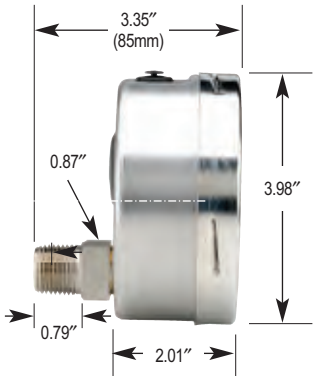

60-410/510

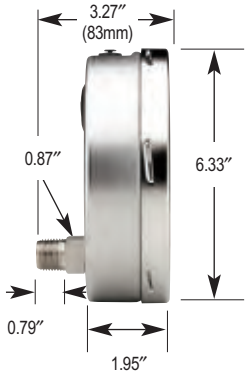

40-400/500 Front Flange

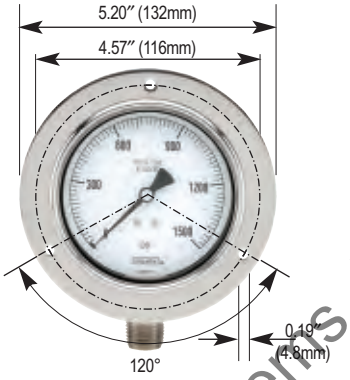

60-400/500 Front Flange

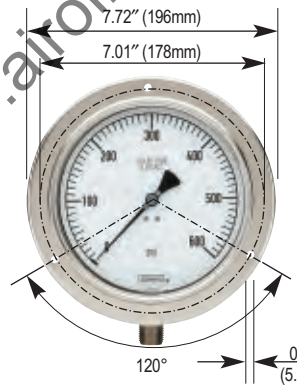

25-410/510 Front Flange

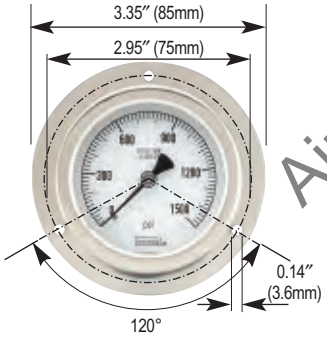

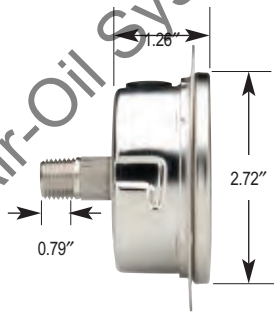

40-410/510 Front Flange

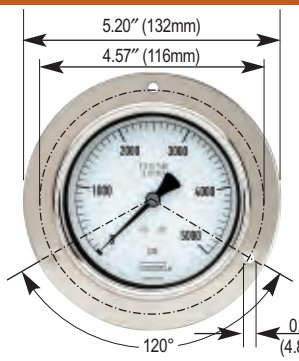

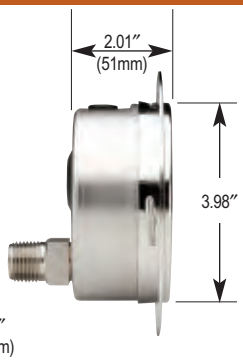

60-410/510 Front Flange

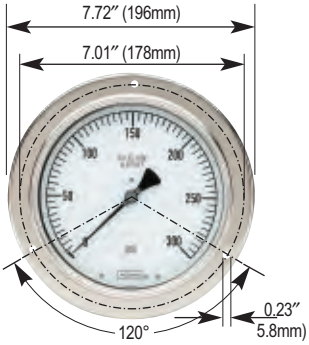

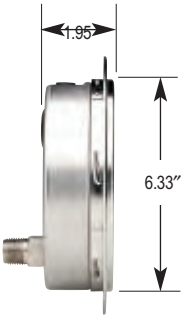

40-400/500 Rear Flange

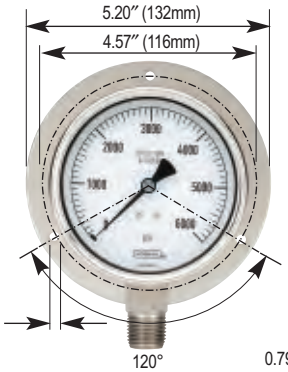

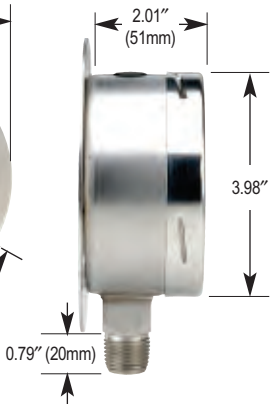

60-400/500 Rear Flange

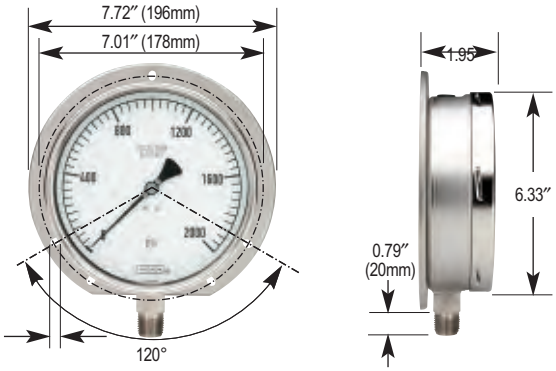

40-410/510 Rear Flange

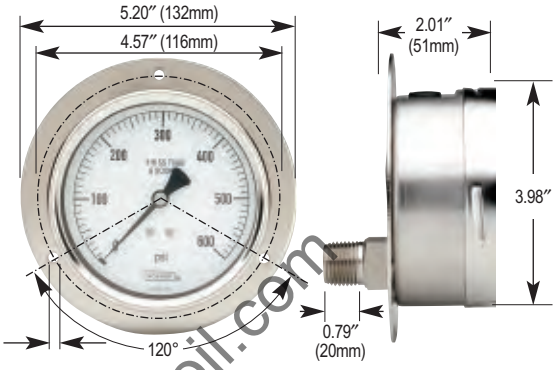

60-410/510 Rear Flange

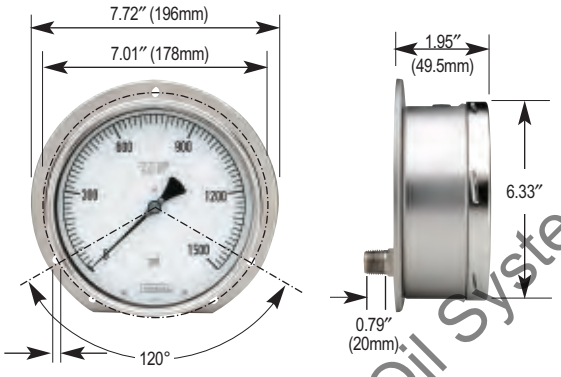

25-410/510 Flange Ring

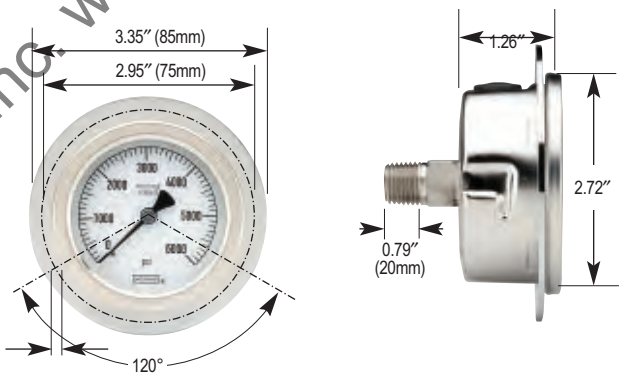

25-410/510 Panel Mount Clamp

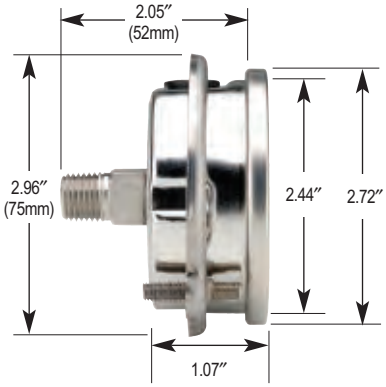

40-410/510 SS Narrow Bezel w/U-Clamp

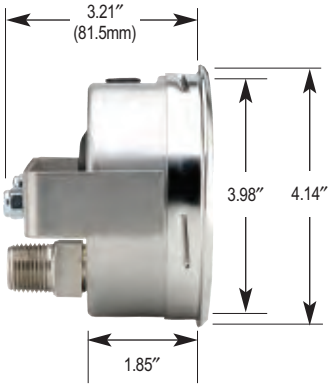

60-410/510 SS Narrow Bezel w/U-Clamp

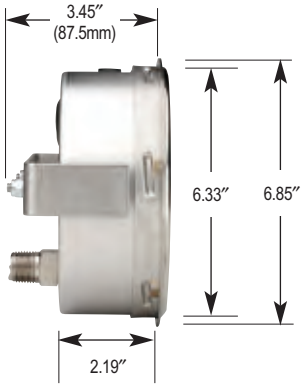

600/700 SERIES

- 600 (Brass) and 700 (316 Stainless steel) Gauges are specifically designed for demanding applications in the chemical and petroleum processing industries
- **Extreme high pressure** ranges available from vacuum through 60,000 psi
- Low pressure ranges from -30 in$H_2$0 vac through 10 psi
- 4-1/2 inch size – bottom connected
- Turret style cases are constructed of a rugged, corrosion-resistant phenolic material
- Solid front, safety case with a blow-out black isolates the gauge face from the pressure
- Adjustable pointer
- Standard lenses are shatter resistant acrylic; safety glass lenses available
- Stock availability

OPERATING SPECIFICATIONS

1. Working Pressure Limitations

a. **Dynamic Pressure**
The working pressure should be limited to 60% of the dial range.

b. **Static Pressure**
The working pressure, when no sharp fluctuations occur, should be limited to 90% of the dial range.

2. Ambient Temperature

a. **640/740 Series**
-40°F to 150°F (-40°C to 65°C)

b. **660/760 Series**
-4°F to 150°F (-20°C to 65°C) Glycerine Fill
-40°F to 150°F (-40°C to 65°C) Special Fill

3. Media Temperature

a. **640 Series**
-4°F to 150°F (-20°C to 65°C)

b. **660 Series**
-4°F to 150°F (-20°C to 65°C) Glycerine Fill
-40°F to 150°F (-40°C to 65°C) Special Fill

c. **740 Series**
-40°F to 212°F (-40°C to 100°C)
500°F (260°C)
Maximum for short term/intermitent

d. **760 Series**
-4°F to 212°F (-20°C to 100°C) Glycerine Filled
-40°F to 212°F (-40°C to 100°C) Special Fill
250°F (130°C) Maximun for short term/intermitent

APPLICATIONS

- Chemical petroleum and petrochemical refineries
- Utilities
- Food processing plants
- Paper mills
- Power generating stations
- Water treatment plants
- Wherever accuracy, safety, readability and reliability are crucial

ACCURACY

- 4-1/2 inch 600 Series Gauges: ±0.5%
- 4-1/2 inch 700 Series Gauges: ±0.5%
- 4-1/2 inch 700 Series Gauges (LP): ±1.5%

	MODELS	SPECIFICATIONS
Case	45 640, 45 660, 45 740, 45 760	Turret style black phenolic. Solid front, safety case with blow out back
Bayonet Ring	45 640, 45 660, 45 740, 45 760	Thread black phenolic
Lens	45 640, 45 660, 45 740, 45 760	Acrylic. Laminated safety glass is available as a stock option
Bourdon Tube	45 640, 45 660 **(up to 600 psi)**	Berylium copper "C" tube
	45 740, 45 760 **(up to 600 psi)**	316 Stainless steel "C" Tube
	45 640, 45 660, 45 750, 45 760 **(greater than 600 psi)**	316 Stainless steel coiled safety tube
Connection	45 640, 45 660	1/4″ NPT brass
	45 740, 45 760	1/4″ NPT or 1/2″ NPT 316 Stainless steel
Movement	45 640, 45 660	Brass and Nickel Silver with highly polished bearing surfaces. An internal zero stop is standard.
	45 740, 45 760	Stainless steel with highly polished bearing surfaces. An internal zero stop is standard.
Safety Protection	45 640, 45 660, 45 740, 45 760	Blow out back on the rear of case.
Accuracy	45 640, 45 660	± 1/2% Full Scale ASME grade 2A
	45 740, 45 760	± 1/2% Full Scale ASME grade 2A. ± 1.5% Full Scale ASME grade A for inH_2O, 5 psi and 10 psi ranges
Pointer	45 640, 45 660, 45 740, 45 760	Balanced micro adjustable aluminum, black finish
Dial	45 640, 45 660, 45 740, 45 760	Aluminum, white background with black markings. Single scale psi is standard. psil/bar, psi/kPa, or psi/Kg/cm² dual scale are available as stock options. On dual scale dials, the outer scale is psi in black and the Inner metric scale is red. UV resistant.
Fill Liquid	45 660, 45 760	Glycerine and water. Silicone and halocarbon are available as options.

For details on accuracy/standard dial configuration and dial layouts, see pages 74-78

ORDERING INFORMATION

SERIES	**600/700**											
SIZE	**45**	4 1/2 Inch										
CASE TYPE	**640**	Brass, Dry, Bottom Connection			**660**	Brass, Liquid Filled, Bottom Connection						
	740	SS, Dry, Bottom Connection			**760**	SS, Liquid Filled, Bottom Connection						
PRESSURE RANGES	**30 inH$_2$O vac**	30 inH$_2$O to 0 inH$_2$O	**30 ″ vac**	30 inHg to 0	**5**	0 psi to 5 psi	**300**	0 psi to 300 psi	**5000**	0 psi to 5000 psi		
	60 inH$_2$O vac	60 inH$_2$O to 0 inH$_2$O	**30/15**	30 inHg to 0 to 15 psi	**10**	0 psi to 10 psi	**400**	0 psi to 400 psi	**6000**	0 psi to 6000 psi		
	60/60 inH$_2$O	60 inH$_2$O to 60 inH$_2$O	**30/30**	30 inHg to 0 to 30 psi	**15**	0 psi to 15 psi	**600**	0 psi to 600 psi	**10000**	0 psi to 10000 psi		
	60 inH$_2$O	0 inH$_2$O to 60 inH$_2$O	**30/60**	30 inHg to 0 to 60 psi	**30**	0 psi to 30 psi	**800**	0 psi to 800 psi	**15000**	0 psi to 15000 psi		
	100 inH$_2$O	0 inH$_2$O to 100 inH$_2$O	**30/100**	30 inHg to 0 to 100 psi	**60**	0 psi to 60 psi	**1000**	0 psi to 1000 psi	**20000**	0 psi to 20000 psi		
	160 inH$_2$O	0 inH$_2$O to 160 inH$_2$O	**30/160**	30 inHg to 0 to 160 psi	**100**	0 psi to 100 psi	**1500**	0 psi to 1500 psi	**30000**	0 psi to 30000 psi		
	200 inH$_2$O	0 inH$_2$O to 200 inH$_2$O	**30/200**	30 inHg to 0 to 200 psi	**160**	0 psi to 160 psi	**2000**	0 psi to 2000 psi	**40000**	0 psi to 40000 psi		
	300 inH$_2$O	0 inH$_2$O to 300 inH$_2$O	**30/300**	30 inHg to 0 to 300 psi	**200**	0 psi to 200 psi	**3000**	0 psi to 3000 psi	**60000**	0 psi to 60000 psi		
SCALE OPTION	**inH$_2$O**	inH$_2$O single scale	**psi**	psi single scale	**psi/kPa**	psi/kPa dual scale	**psi/kg/cm^2**	psi/kg/cm^2 dual scale	**psi/bar**	psi/bar dual scale		
CONNECTION SIZE	**1/4**	1/4″ NPT	**1/2**	1/2″ NPT	**9/16-18**	9/16 18 UNF 3B (above 30000 psi standard)						
OPTIONS	**SGL**	Safety glass lens			**CPMR**	Uninstalled chrome panel mount ring	**ST**	Stainless steel tagging				
	GL	Glass lens			**MDM**	Manocont dampened movement	**BP3**	Brass press fit orifice 0.3 mm				
	MIP	Maximum indicating pointer			**OS**	Overload stop	**BT3**	Brass threaded orifice 0.3 mm				
	BPMR	Uninstalled black panel mount ring			**LM**	Laser marking	**ST8**	316SS threaded orifice 0.8 mm				

Please consult your local NOSHOK Distributor or NOSHOK, Inc. for availability and delivery information.

NOTE: Refer to 600/700 Series Options & Accessories chart on page 66 for availability by model number.

EXAMPLE **45-740 - 100 psi - 1/2 - BT8**

1. **Select model number (size & case type)**
2. **Select pressure range & scale option**
3. **Select connection size (if more than one is offered)**
4. **Select any required accessory or option**

OUTLINE DIMENSIONS

45-640/660 & 45-740/760

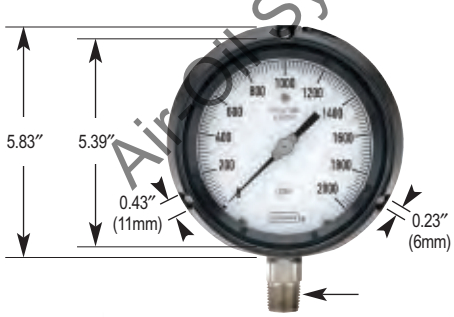

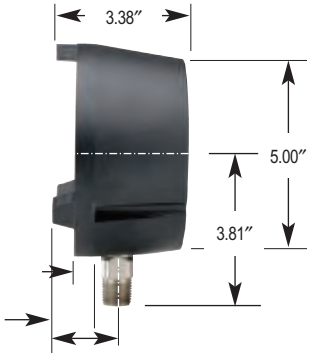

45-640/660 & 45-740/760 Panel Mount Ring

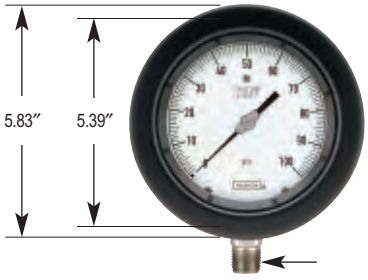

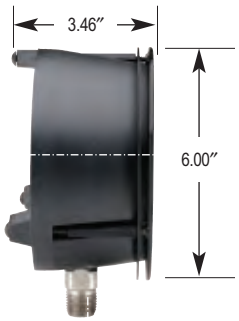

Precision Test

800 SERIES

- Meet the specification of ASME Standard B40.1 Grade 3A
- Ranges available vacuum through 20,000 psi
- +/-0.25% accuracy to 100% of dial range on rising or falling pressure
- 6 inch size – bottom connected
- Adjustable knife-edge pointer and mirrored dial eliminate parallax error*
- Brass or 316 Stainless steel wetted parts
- Safety blow-out disc on the rear case is standard
- Instrument glass lens and 304 Stainless steel case
- Jeweled brass and nickel silver bearings and movement
- Panel mountable, optional carrying case
- Stock availability

*The difference in apparent direction of an object as seen from two different points not on a straight line with the object

	MODELS	SPECIFICATIONS
Case	60 800	304 Stainless steel
Cover	60 800	304 Stainless steel
Lens	60 800	Instrument glass
Bourdon Tube	60 800	Berylium copper to 1000 psi 316 SS 1500 psi to 10000 psi NI Span C 15000 psi to 20000 psi
Connection	60 800	1/4 ″ NPT bottom connection 1/2 ″ NPT bottom connection for 20000 psi
Movement	60 800	Brass with jeweled bearings nickel silver pinion gear and shafts
Safety Protection	60 800	Safety relief disc on the back of the case
Accuracy	60 800	± 0.25% Full Scale ASME grade 3A
Pointer	60 800	Adjustable knife edge pointer
Dial	60 800	Aluminum, white mirrored background with black graduations

OPERATING SPECIFICATIONS

1. Working Pressure Limitations

Static Pressure

The working pressure, when no sharp fluctuations occur, should be limited to 100% of the dial range.

NOTE: 800 Series Test Gauges are not intended for dynamic applications.

2. Ambient Temperature

-40°F to 140°F (-40°C to 60°C)

3. Media Temperature

-40°F to 180°F (-40°C to 80°C)

APPLICATIONS

- Laboratories on calibration test stands
- Sophisticated aerospace equipment used in launching space vehicles
- Gauge repair facilities
- Wherever high accuracy and sensitivity are critical

For details on accuracy/standard dial configuration and dial layouts, see pages 74-78

ORDERING INFORMATION

SERIES	**800**								
SIZE	**60**	6 Inch							
CASE TYPE	**800**	SS Case, Bottom Connection							
PRESSURE RANGES	**30 ″ Vac**	30 inHg to 0	**30/300**	30 inHg to 0 to 300 psi	**300**	0 psi to 300 psi	**5000**	0 psi to 5000 psi	
	30/15	30 inHg to 0 to 15 psi	**15**	0 psi to 15 psi	**400**	0 psi to 400 psi	**6000**	0 psi to 6000 psi	
	30/30	30 inHg to 0 to 30 psi	**30**	0 psi to 30 psi	**600**	0 psi to 600 psi	**10000**	0 psi to 10000 psi	
	30/60	30 inHg to 0 to 60 psi	**60**	0 psi to 60 psi	**1000**	0 psi to 1000 psi	**15000**	0 psi to 15000 psi	
	30/100	30 inHg to 0 to 100 psi	**100**	0 psi to 100 psi	**1500**	0 psi to 1500 psi	**20000**	0 psi to 20000 psi	
	30/160	30 inHg to 0 to 160 psi	**160**	0 psi to 160 psi	**2000**	0 psi to 2000 psi			
	30/200	30 inHg to 0 to 200 psi	**200**	0 psi to 200 psi	**3000**	0 psi to 3000 psi			
SCALE OPTION	**psi**	psi single scale							
CONNECTION SIZE	**1/4**	1/4″ NPT	**1/2**	1/2″ NPT (standard for 20000 psi)					
OPTIONS	**SSFF**	304SS front flange	**ST**	Stainless steel tagging					
	SSRF	304SS rear flange	**BP3**	Brass press fit orifice 0.3 mm (below 10,000 psi)					
	CC	Carrying case	**BT8**	Brass threaded orifice 0.8 mm (below 10,000 psi)					
	LM	Laser marking	**ST8**	316SS threaded orifice 0.8 mm (10,000 20,000 psi)					

Please consult your local NOSHOK Distributor or NOSHOK, Inc. for availability and delivery information.

NOTE: Refer to 800 Series Options & Accessories chart on page 67 for availability by model number.

EXAMPLE

60-800 - 100 psi - 1/4 - CC

1. **Select model number (size & case type)**
2. **Select pressure range**
3. **Select connection size (if more than one is offered)**
4. **Select any required accessory or option**

OUTLINE DIMENSIONS

60-800* | **60-800 Front Flange** | **60-800 Rear Flange**

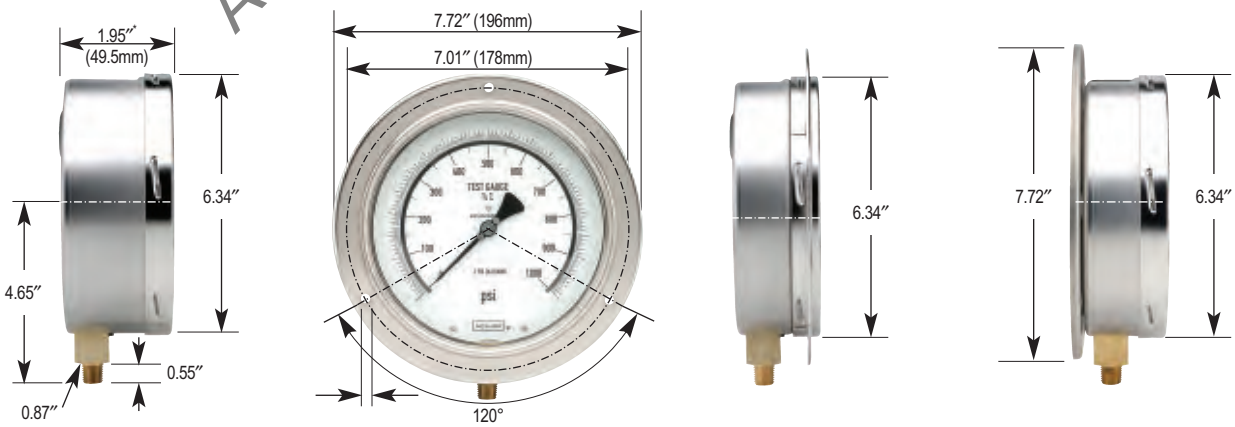

*For ranges ≤60 psi and ≥1,500 psi, depth dimension changes to 2.58″ (65.5mm)

ABS & Stainless Steel Liquid Filled

900 SERIES

- Extremely high quality pressure gauges, liquid filled for extended service life and shock resistance
- Ranges available from vacuum to 15,000 psi
- 1-1/2, 2, 2-1/2, 4 inch sizes – bottom or back connected
- Lightweight shatter-resistant ABS case with Plexiglass™ lens for extra strength, or 304 stainless steel case with polycarbonate lens
- Unique o-ring case and connection seals guard against leakage and protect against shock and vibration
- Relief disc on top or back provides positive case relief
- Brass and copper alloy movement
- High grade Glycerine fill dampens the effects of pulsation, vibration and shock loads, and provides lubrication of the movement
- Volume oriented
- Stock availability

OPERATING SPECIFICATIONS

1. Working Pressure Limitations

a. **Dynamic Pressure**
The working pressure should be limited to 60% of the dial range

b. **Static Pressure**
The working pressure, when no sharp fluctuations occur, should be limited to 90% of the dial range.

2. Ambient Temperature
-4°F to 140°F (-20°C to 60°C) Glycerine Fill
-40°F to 140°F (-40°C to 60°C) Special Fill

3. Media Temperature
-4°F to 140°F (-20°C to 60°C) Glycerine Fill
-40°F to 140°F (-40°C to 60°C) Special Fill

APPLICATIONS

- Industrial applications where pulsation, vibration and shock are present

ACCURACY

- 1-1/2 and 2 inch 900 Series Gauges: ±2.5%
- 2-1/2 inch 900 Series Gauges: ±1.5%
- 4 inch 900 Series Gauges: ±1.0%

For details on accuracy/standard dial configuration and dial layouts, see pages 74-78

	MODELS	SPECIFICATIONS
Case	15-910, 25-900, 25-910	ABS (Acryl Nitril Butadien Styrol)
	25-901, 25-911, 40-901, 40-911	304 Stainless steel
Bezel	25-901, 25-911, 40-901, 40-911	304 Stainless steel
Lens	15-910, 25-900, 25-910	Plexiglass™; ultrasonically welded to the case
	25-901, 25-911	Polycarbonate
	40-901, 40-911	Instrument glass
Bourdon Tube	15-910, 25-900, 25-910, 25-901, 25-911, 40-901, 40-911 **(up to 600 psi)**	Phosphor bronze "C" tube
	15-910, 25-900, 25-910, 25-901, 25-911, 40-901, 40-911 **(greater than 600 psi)**	Coiled safety tube
Connection	15-910	1/8″ NPT brass
	25-900, 25-910, 25-901, 25-911,	1/4″ NPT brass
	40-901, 40-911	1/4″ NPT brass or 1/2″ NPT brass
Movement	15-910, 25-900, 25-910, 25-901, 25-911, 40-901, 40-911	Brass and nylon with highly polished bearing surfaces
Safety Protection	15-910, 25-900, 25-910	Safety relief disc on the back of the case
	25-901, 25-911, 40-901, 40-911	Safety relief disc on the top of the case
Accuracy	15-910, 20-901, 20-911	± 2.5% Full Scale ASME grade B
	25-900, 25-910, 25-901, 25-911	± 1.5% Full Scale ASME grade A
	40-901, 40-911	± 1% Full Scale ASME grade 1A
Pointer	15-910, 25-900, 25-910, 25-901, 25-911	Molded plastic
	40-901, 40-911	Balanced aluminum, black finish
Dial	15-910, 25-900, 25-910, 25-901, 25-911	Molded plastic, white background with black psi scale and red kPa scale. UV resistant
	40-901, 40-911	Aluminum, white background, dual scale psi – kPa. black psi scale and Red kPa scale. UV resistant
Fill Liquid	15-910, 25-900, 25-910, 25-901, 25-911, 40-901, 40-911	Glycerine and water

ORDERING INFORMATION

SERIES	**900**							
SIZE	**15**	1-1/2 Inch	**20**	2 Inch	**25**	2-1/2 Inch	**40**	4 Inch
CASE TYPE	**900**	ABS Case, Liquid Filled, Bottom Connection			**910**	ABS Case, Liquid Filled, Back Connection		
	901	SS Case, Liquid Filled, Bottom Connection			**911**	SS Case, Liquid Filled, Back Connection		
PRESSURE RANGES	**30 ″ Vac**	-30 inHg to 0	**30/300**	-30 inHg to 0 to 300 psi	**300**	0 psi to 300 psi	**3000**	0 psi to 3000 psi
	30/15	-30 inHg to 0 to 15 psi	**15**	0 psi to 15 psi	**400**	0 psi to 400 psi	**5000**	0 psi to 5000 psi
	30/30	-30 inHg to 0 to 30 psi	**30**	0 psi to 30 psi	**600**	0 psi to 600 psi	**6000**	0 psi to 6000 psi
	30/60	-30 inHg to 0 to 60 psi	**60**	0 psi to 60 psi	**800**	0 psi to 800 psi	**7500**	0 psi to 7500 psi
	30/100	-30 inHg to 0 to 100 psi	**100**	0 psi to 100 psi	**1000**	0 psi to 1000 psi	**10000**	0 psi to 10000 psi
	30/160	-30 inHg to 0 to 160 psi	**160**	0 psi to 160 psi	**1500**	0 psi to 1500 psi	**15000**	0 psi to 15000 psi
	30/200	-30 inHg to 0 to 200 psi	**200**	0 psi to 200 psi	**2000**	0 psi to 2000 psi		
SCALE OPTION	**psi**	psi single scale	**psi/kPa**	psi/kPa dual scale	**psi/kg/cm²**	psi/kg/cm² dual scale	**psi/bar**	psi/bar dual scale
CONNECTION SIZE	**1/8**	1/8″ NPT	**1/4**	1/4″ NPT	**1/2**	1/2″ NPT		
OPTIONS	**PMC**	Steel panel mount clamp	**SSCR**	304SS cover ring	**SFF**	304SS front flange	**BP3**	Brass press fit orifice 0.3 mm
	SPMC	304SS panel mount clamp	**MIP**	Maximum indicating pointer	**SSRF**	304SS rear flange	**BT5**	Brass threaded orifice 0.5 mm
	SSB-U	Stainless steel bezel & u-clamp	**AP**	Adjustable pointer	**LM**	Laser marking	**BT8**	Brass threaded orifice 0.8 mm
	SSB	Stainless steel bezel	**SGL**	Safety glass lens	**ST**	Stainless steel tagging	**7/16″ -20**	Straight thread available*

Please consult your local NOSHOK Distributor or NOSHOK, Inc. for availability and delivery information.

NOTE: Refer to 900 Series Options & Accessories chart on page 67 for availability by model number.
* Includes Viton® O-Ring

EXAMPLE

25-910 - 1000 psi/kPa - 1/4 - PMC

1. **Select model number (size & case type)**
2. **Select pressure range & scale option**
3. **Select connection size (if more than one is offered)**
4. **Select any required accessory or option**

OUTLINE DIMENSIONS

25-900

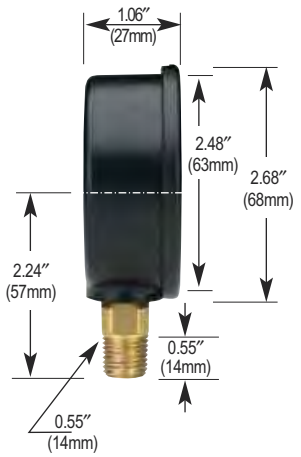

25-901

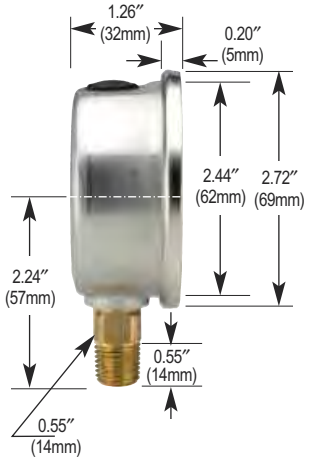

40-901

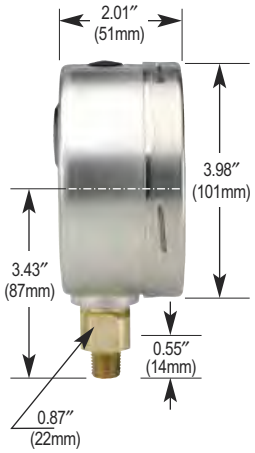

Dimensions

15-910

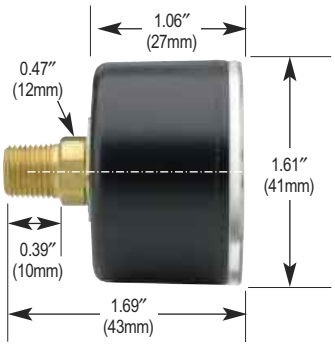

25-910

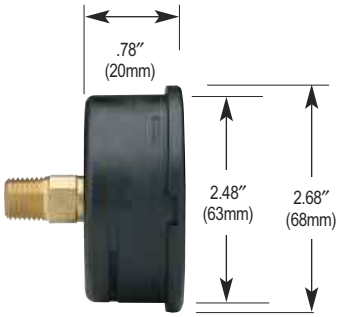

25-911

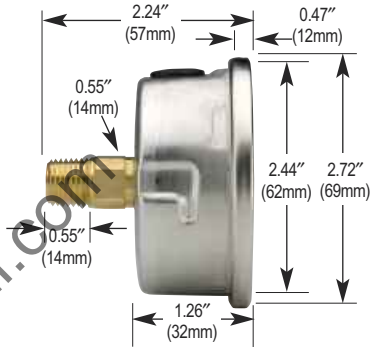

40-901 Front Flange

25-910 Front Flange

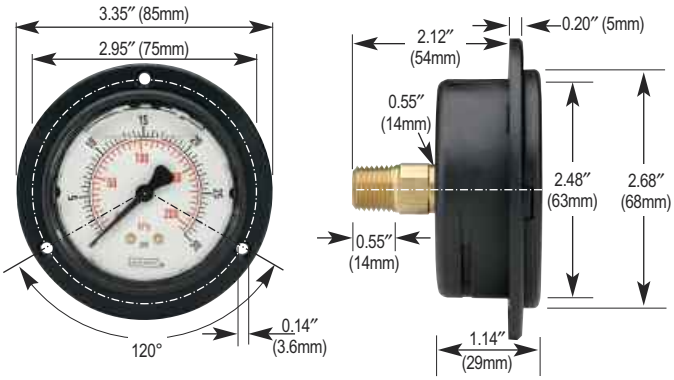

25-911 Front Flange

40-911 Front Flange

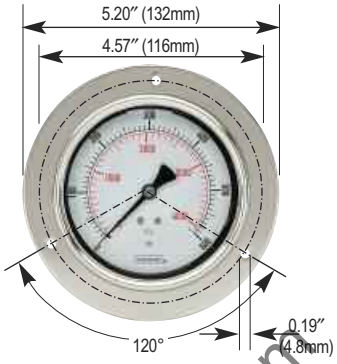

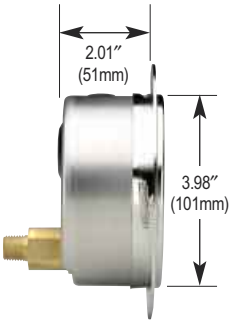

25-911 Flange Ring

25-910 Panel Mount Clamp

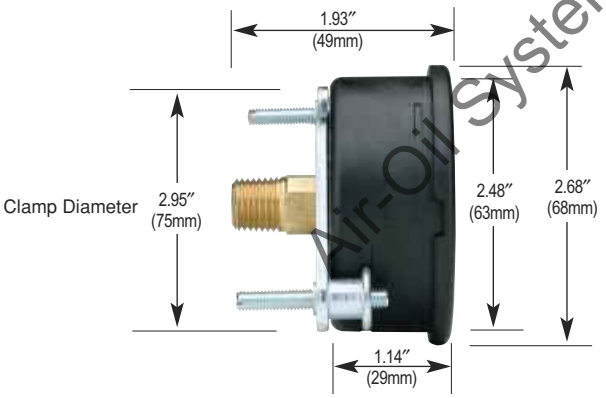

25-911 Panel Mount Clamp

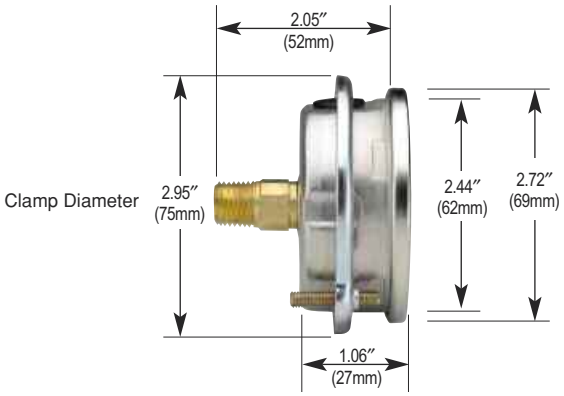

40-911

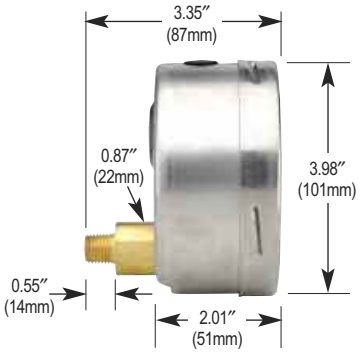

Digital Gauge

1000 SERIES

- Allows for local digital indication of pressure in place of mechanical gauges
- Integrated battery provides 4000 hours of battery life
- Pressure ranges from 30/30 psi to 10,000 psi
- 4 inch size – bottom connected
- Durable 304 Stainless steel case
- Display has an integrated bar graph with a trailing indicating pointer to show the trends in a working pressure system
- Additional 4-1/2 digit display provides a direct readout of the peak value, tare, min./max. memory, and other functions
- Optional internal light ensures display is optimally lit for a clear readout in all lighting conditions
- Buttons on the front of the display allow easy adjustment of the programmable functions
- Meets all electromagnetic compatibility requirements (EMC) to EN 61326
- CE compliant to suppress RFI, EMI and ESD
- Optional features: Tare function, password protection, internal lighting, 300° rotatable base, Rubber Case Protector

APPLICATIONS

- Machine construction
- Plant and apparatus construction
- Hydraulics
- Pneumatics
- Measuring equipment monitoring

SPECIFICATIONS

Display	0.43 ″ high liquid crystal display
Digits	4 STD. 4 1/2, up to 9999
Accuracy	±0.5 % Full Scale (BFSL)
Update Rate	5 times/second
Pressure Ranges	Standard ranges from 30 psig to 10000 psig, compound ranges from 30/30 psig to 30/600 psig
Proof Pressure	2 times Full Scale range, maximum 15000 psi
Wetted Materials	≤ 750 psig stainless steel, aluminum, NBR, ceramic measuring element ≥ 1000 psig stainless steel, thin film measuring element
Housing Material	Stainless steel
Power Supply	2 x 1.5V “AA” Battery 4000 hrs (“AA” 2000 mAh)
Programmable Functions	Adjustable through front key pad **Tare** ±20% of Full Scale range **On/Off** Adjustable automatic turn off **Measuring Unit** bar, psi, MPa
Temperature Influence	Compensated 32 °F to 140 °F (0 °C to 60 °C) Effect ±0.15 % per 10K at zero and span Span effect is ±0.005 % Full Scale/°F
Temperature Ranges	Storage 4°F to 158°F (20°C to 70°C) Media 22°F to 185°F (30°C to 85°C) Ambient 14°F to 140°F (10°C to 60°C)
Environmental Rating	NEMA 4X (IP 65 according to EN60529/IEC529)
Electromagnetic Rating	Compliant to EN 61326, EMI and ESD protection
Weight	0.88 lbs.

ORDERING INFORMATION

SERIES	**1000**							
PRESSURE RANGES	**30/30**	30 inHg to 30 psig	**30**	0 psig to 30 psig	**1450**	0 psig to 1450 psig	**7500**	0 psig to 7500 psig
	30/60	30 inHg to 60 psig	**60**	0 psig to 60 psig	**2000**	0 psig to 2000 psig	**10000**	0 psig to 10000 psig
	30/145	30 inHg to 145 psig	**145**	0 psig to 145 psig	**3000**	0 psig to 3000 psig		
	30/300	30 inHg to 300 psig	**300**	0 psig to 300 psig	**5000**	0 psig to 5000 psig		
	30/600	30 inHg to 600 psig	**600**	0 psig to 600 psig	**6000**	0 psig to 6000 psig		
			psig = Gauge Pressure		Other ranges available on special request			
PROCESS CONNECTIONS	**2**	1/4 NPT						
OPTIONS	**1**	Peak memory Standard	**ORF**	Threaded orifice				
	6	Enhanced Software	**RCP**	Rubber Case Protector				

Please consult your local NOSHOK Distributor or NOSHOK, Inc. for availability and delivery information.

EXAMPLE **1000 – 600 – 2 – 1 – ORF**

Series	1000
Pressure Range	0 psig to 600 psig
Process Connection	1/4 NPT
Options	Peak memory
Orifice	

OUTLINE DIMENSIONS

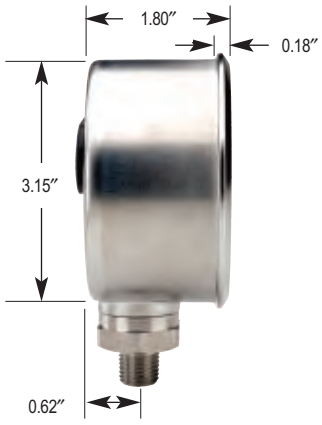

Differential Gauge - Piston Type

1000 SERIES

- Accurately measures the pressure drop across filters, pumps, strainers, separators and valves
- Maximum static or working pressure to 6,000 psi
- 2-1/2 and 4-1/2 inch sizes - back or side connected
- Rugged case construction with weather-resistant NEMA 4X enclosure
- Single piece construction of ceramic magnet/piston minimizes “blow by” and increases accuracy
- Optional liquid filling lubricates gauge internals and extends service life by dampening the effects of vibration, pulsation and shock
- Media leakage within the sensor body is by design and kept to a minimum through precise engineering specifications
- Shipped with a certificate of calibration to ensure accuracy and quality performance
- Cost effective

SPECIFICATIONS

Nominal Sizes	2 1/2 Inch (63.5mm) 4 1/2 Inch (114.3mm)
Case and Bezel Material	Fiberglass reinforced thermoplastic
Lens	Acrylic Standard Laminated safety glass optional
Sensor Housing Material	Black anodized aluminum standard 316L Stainless steel optional
Sensor Material	316 Stainless steel and ceramic piston/magnet
O-Ring Material	Viton standard Buna N optional Ethylene propylene optional
Process Connection	1/4 NPT Female, back connection standard 1/4 NPT Female, side connection optional
Accuracy	±2% of Full Scale on rising pressure
Dial	Aluminum, white background with black markings
Pointer	Balanced aluminum, black finish
Gauge Fill Fluid	Glycerine optional Others available please consult factory
Operating Temp.	40ºF to 200ºF (40ºC to 93ºC)
Ranges	0 to 5 psid through 0 to 100 psid
Max. Working Static Pressure	6000 psig

APPLICATIONS

- Filters
- Flow indicators
- Heat exchangers
- Back flow restrictors
- Hydraulic and pneumatic systems
- Water treatment systems
- Pumps and compressors
- Industrial machinery and machine tools

ORDERING INFORMATION										
GAUGE SIZE & SERIES	25 - 10	2 1/2 Inch	45 - 10	4 1/2 Inch						
CONNECTION LOCATION	1	Back								
	2	Side								
CONNECTION SIZE	2	1/4″ NPT Female								
PRESSURE RANGE	P5	0 to 5 psid	P15	0 to 15 psid	P25	0 to 25 psid	P50	0 to 50 psid	P75	0 to 75 psid
	P10	0 to 10 psid	P20	0 to 20 psid	P30	0 to 30 psid	P60	0 to 60 psid	P100	0 to 100 psid
SENSOR HOUSING MATERIAL	A	Aluminum, black								
	S	316L Stainless steel								
O-RING MATERIAL	2	Viton	3	Buna N	4	Ethylene Propylene				
CASE MATERIAL	P	Thermoplastic								
LENS	1	Acrylic	2	Safety Glass	3	Acrylic with MIP	4	Acrylic with Alarm Contacts		
FILL FLUID	GY	Glycerine	SL	Silicone	HL	Halocarbon				

Please consult your local NOSHOK Distributor or NOSHOK, Inc. for availability and delivery information.

EXAMPLE **25-10 1 2 - P5 - A 2 P - 1 - GY**

Gauge size & Series	2-1/2 Inch – Series 1000
Connection Location	Back
Connection Size	1/4 NPT female
Pressure Range	0 psid to 5 psid
Sensor Housing Material	Aluminum, black
O-Ring Material	Viton
Case Material	Thermoplastic
Lens	Acrylic
Fill Fluid	Glycerine

OUTLINE DIMENSIONS

PANEL CUT-OUT DIMENSIONS

2-1/2 Inch Gauge

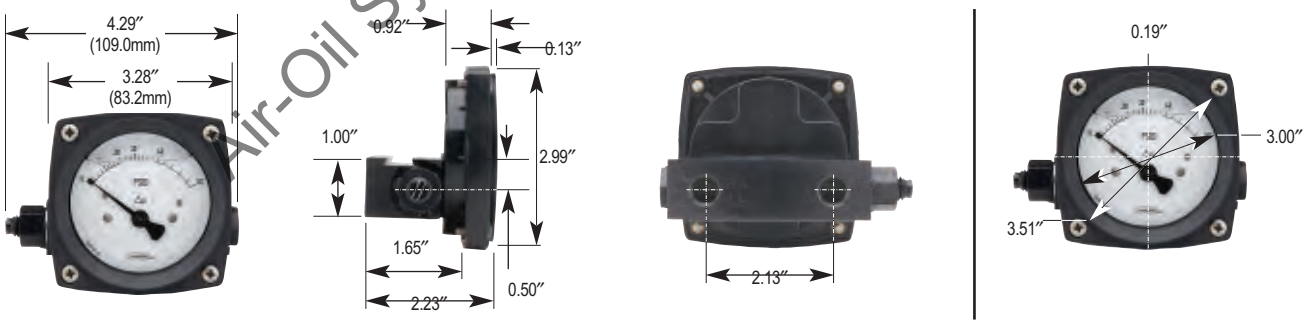

4-1/2 Inch Gauge

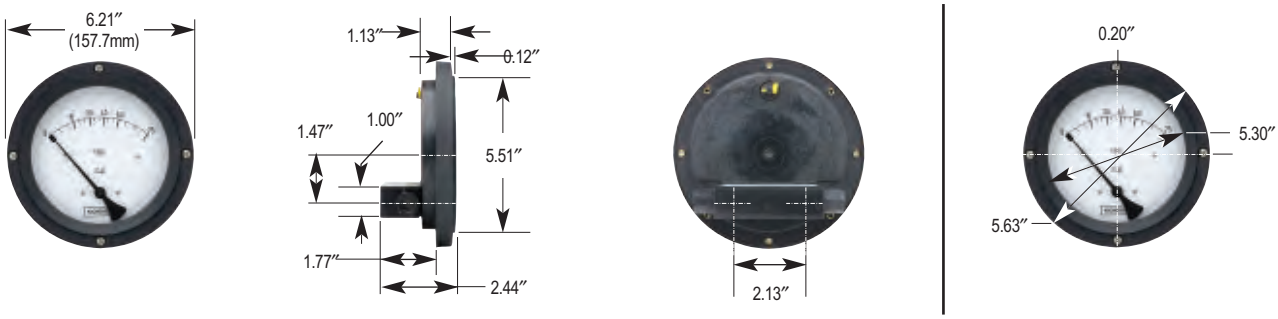

Differential Gauge - Diaphragm Type

1100 SERIES

- Precisely measures pressure drops across filters, strainers, separators, heat exchangers and applications where a higher level of solids are present in the measuring media
- High side is completely isolated from low side to prevent fluid movement between ports
- Maximum static or working pressure to 3,000 psi, 1,500 psi with brass housing
- 2-1/2 and 4-1/2 inch sizes – top & bottom, or back connected
- Sensor housing is cast in a black anodized aluminum, 316L Stainless steel or brass and comes standard with a weather-resistant NEMA 4X enclosure and shatter-resistant acrylic lens
- Optional liquid filling lubricates gauge internals and extends service life by dampening the effects of vibration, pulsation and shock
- Convoluted diaphragm fully supported to the rated working pressure of the gauge
- Shipped with a certificate of calibration to ensure accuracy and quality performance

APPLICATIONS

- Filters
- Flow indicators
- Heat exchangers
- Back flow restrictors
- Hydraulic and pneumatic systems
- Water treatment systems
- Pumps and compressors
- Industrial machinery and machine tools

SPECIFICATIONS

Nominal Sizes	2 1/2 Inch (63.5mm) 4 1/2 Inch (114.3mm)
Case and Bezel Material	Fiberglass reinforced thermoplastic
Lens	Acrylic standard Laminated safety glass optional
Sensor Housing Material	Black anodized aluminum standard 316L Stainless steel optional Brass optional
Sensor Material	316 Stainless steel and ceramic magnet
O-Ring Material	Buna N standard Viton optional Ethylene propylene optional
Process Connection	1/4 NPT Female, back connection standard 1/4 NPT Female, top & bottom optional
Accuracy	±2% Full Scale for ranges 0 psid to 15 psid & above ±5% Full Scale for ranges below 0 psid to 15 psid
Dial	Aluminum, white background with black markings.
Pointer	Balanced aluminum, black finish
Gauge Fill Fluid	Glycerine optional Others available please consult factory
Operating Temp.	40ºF to 200ºF (40ºC to 93ºC)
Ranges	0 to 50 in$H_2$0 through 0 psid to 100 psid
Max. Working Static Pressure	3000 psig 316L Stainless steel and aluminum housing 1500 psig brass housing

ORDERING INFORMATION								
GAUGE SIZE & SERIES	25 - 11	2 1/2 Inch	45 - 11	4 1/2 Inch				
CONNECTION LOCATION	0	Top & bottom						
	1	Back						
CONNECTION SIZE	2	1/4″ NPT female						
PRESSURE RANGE	W50	0 to 50 inH_2O	W300	0 to 300 inH_2O	P15	0 to 15 psid	P75	0 to 75 psid
	W75	0 to 75 inH_2O	W400	0 to 400 inH_2O	P25	0 to 25 psid	P100	0 to 100 psid
	W100	0 to 100 inH_2O	P5	0 to 5 psid	P30	0 to 30 psid		
	W200	0 to 200 inH_2O	P10	0 to 10 psid	P50	0 to 50 psid		
SENSOR HOUSING MATERIAL	A	Aluminum, black	B	Brass				
	S	316L Stainless steel						
O-RING MATERIAL	2	Viton	3	Buna N	4	Ethylene propylene		
CASE MATERIAL	P	Thermoplastic						
LENS	1	Acrylic	2	Safety Glass	3	Acrylic with MIP		
FILL FLUID (optional)	GY	Glycerine	SL	Silicone	HL	Halocarbon		

Please consult your local NOSHOK Distributor or NOSHOK, Inc. for availability and delivery information.

EXAMPLE

25-11 1 2 - P75 - A 2 P - 1 - GY

Gauge Size & Series	2-1/2 Inch – Series 1100
Connection Location	Back
Connection Size	1/4″ NPT female
Pressure Range	0 psid to 75 psid
Sensor Housing Material	Aluminum, black
O-Ring Material	Viton
Case Material	Thermoplastic
Lens	Acrylic
Fill Fluid (optional)	Glycerine

OUTLINE DIMENSIONS

PANEL CUT-OUT DIMENSIONS

2-1/2 Inch Gauge

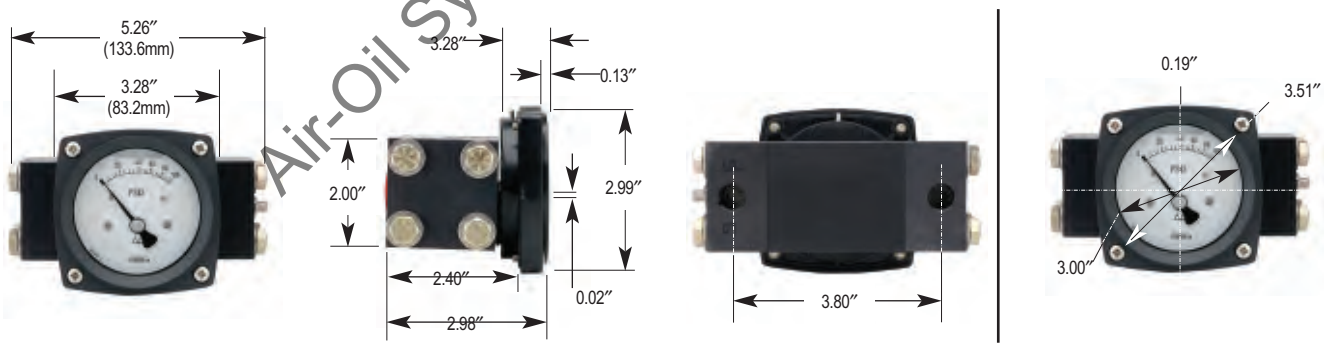

4-1/2 Inch Gauge

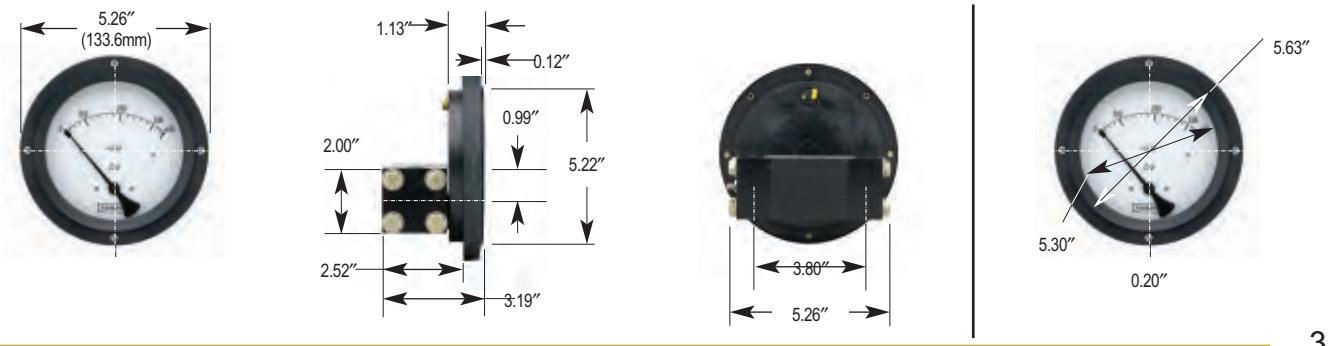

Differential Gauge - Membrane Type High Static Pressure

1200 SERIES

- Designed for applications requiring high static pressure & high differential pressure measurement
- Maximum static or working pressure to 3,000 psi
- Full scale accuracy of ±1% on rising pressure – zero adjustment standard
- 4-1/2 and 6 inch sizes – top & bottom, or back connected
- Durable case construction with weather-resistant NEMA 4X rating & shatter-resistant acrylic lens
- A bi-directional overpressure valve protects the sensor membrane from damage
- Monel membranes and 316L Stainless steel wetted parts
- Optional liquid filling lubricates gauge internals and extends service life by dampening the effects of vibration, pulsation and shock
- Shipped with a certificate of calibration to ensure accuracy and quality performance

APPLICATIONS

- Filters
- Flow indicators
- Heat exchangers
- Back flow indicators
- Hydraulic and pneumatic systems
- Water treatment systems
- Pumps and compressors
- Cryogenic gases and corrosive media

SPECIFICATIONS

Nominal Sizes	4 1/2 inch (114.3mm) 6 inch (152mm)
Dial Case Material	Black anodized aluminum standard 316L Stainless steel optional
Bezel Material	316L Stainless steel
Lens	Acrylic standard Laminated safety glass optional
Sensor Housing	316L Stainless steel
Membrane Fill	Halocarbon
Sensor Element	Monel 500 standard
O-Ring Material	PTFE
Process Connection	1/4 NPT Female, back connection standard 1/4 NPT Female, dual top & bottom optional
Movement	Stainless steel
Accuracy	±1% of Full Scale or rising pressure
Dial	Aluminum, white background with black markings standard Aluminum, black background with white markings optional
Pointer	Balanced aluminum, black finish
Gauge Fill Fluid	Glycerine optional Others available please consult factory
Operating Temp.	40ºF to 200ºF (40ºC to 93ºC)
Ranges	0 to 100 in$H_2$0 through 0 to 600 psid
Max. Working Static Pressure	3000 psig

ORDERING INFORMATION

GAUGE SIZE & SERIES	**45 - 12**	4 1/2 Inch	**60 - 12**	6 Inch				
CONNECTION LOCATION	**0**	Top & bottom						
	1	Back						
CONNECTION SIZE	**2**	1/4″ NPT female						
PRESSURE RANGE	**W100**	0 to 100 inH_2O	**W400**	0 to 400 inH_2O	**P100**	0 to 100 psid	**P500**	0 to 500 psid
	W150	0 to 150 inH_2O	**P15**	0 to 15 psid	**P230**	0 to 230 psid	**P600**	0 to 600 psid
	W200	0 to 200 inH_2O	**P30**	0 to 30 psid	**P300**	0 to 300 psid		
	W300	0 to 300 inH_2O	**P60**	0 to 60 psid	**P400**	0 to 400 psid		
SENSOR HOUSING MATERIAL	**S**	316L Stainless steel						
O-RING MATERIAL	**1**	PTFE						
CASE MATERIAL	**A**	Aluminum, black	**S**	316L Stainless steel				
LENS	**1**	Acrylic	**2**	Safety glass				
FILL FLUID (optional)	**GY**	Glycerine	**SL**	Silicone	**HL**	Halocarbon		

Please consult your local NOSHOK Distributor or NOSHOK, Inc. for availability and delivery information.

EXAMPLE **60-12 0 2 - P15 - S 1 A - 2 - GY**

Gauge Size & Series	6 Inch–Series 1200
Connection Location	Top & Bottom
Connection Size	1/4″ NPT female
Pressure Range	0 psid to 15 psid
Sensor Housing Material	316L Stainless steel
O-Ring Material	PTFE
Case Material	Aluminum, black
Lens	Safety glass
Fill Fluid (optional)	Glycerine

OUTLINE DIMENSIONS

PANEL CUT-OUT DIMENSIONS

4-1/2 Inch Gauge

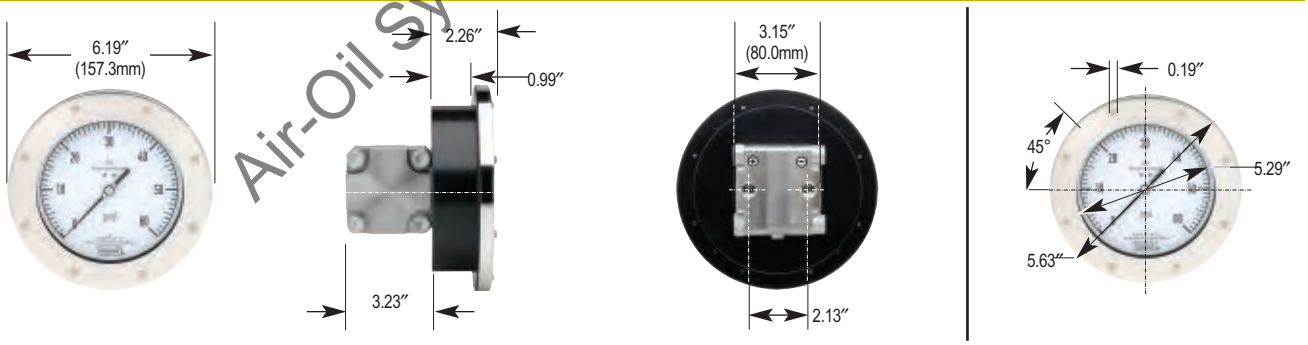

6 Inch Gauge

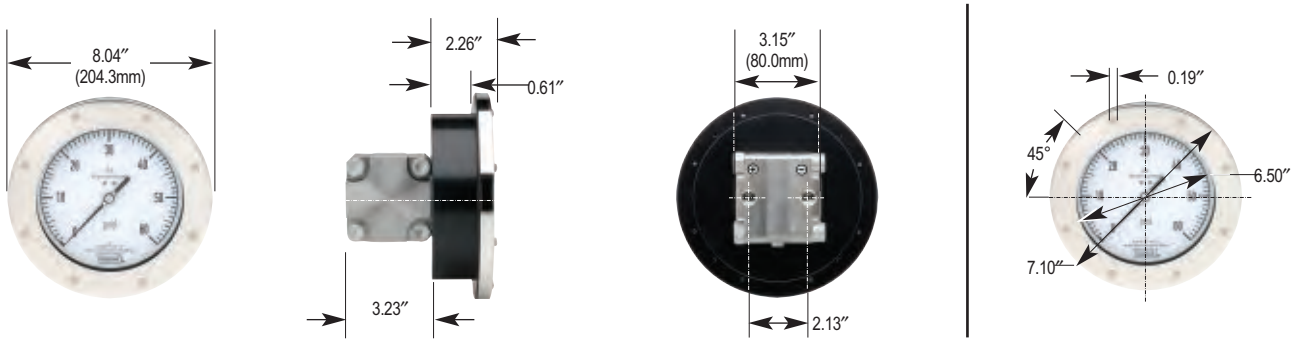

Differential Gauge - Membrane Type Nominal Static Pressure

1300 SERIES

- Designed for integral process applications requiring nominal static and low differential pressure measurement
- Maximum static or working pressure to 600 psi
- Full scale accuracy of ±1%, on rising pressure - zero adjustment standard
- 4-1/2 and 6 inch sizes – top & bottom, or back connected
- Durable case construction with weather-resistant NEMA 4X rating & shatter-resistant acrylic lens
- A bi-directional overpressure valve protects the sensor membrane from damage
- 316L Stainless steel wetted parts
- Optional liquid filling lubricates gauge internals and extends service life by dampening the effects of vibration, pulsation and shock
- Shipped with a certificate of calibration to ensure accuracy and quality performance

SPECIFICATIONS

Nominal Sizes	4 1/2 Inch (114.3mm) 6 Inch (152mm)
Dial Case Material	Black anodized aluminum standard 316L Stainless steel optional
Bezel Material	316L Stainless steel
Lens	Acrylic standard Laminated safety glass optional
Sensor Housing	316L Stainless steel
Membrane Fill	Halocarbon
Sensor Element	316L Stainless steel (NACE compliant)
O-Ring Material	PTFE, Viton or Buna N optional
Process Connection	1/4″ NPT Female, dual top & bottom standard 1/4″ NPT Female, back connection optional
Movement	Stainless steel
Accuracy	±1% of Full Scale on rising pressure
Dial	Aluminum, black background with white markings standard Aluminum, white background with black markings optional
Pointer	Balanced aluminum, black finish
Gauge Fill Fluid	Glycerine optional Others available please consult factory
Operating Temp.	40ºF to 200ºF (40ºC to 93ºC)
Ranges	0 to 100 inH_2O through 0 to 400 psid
Max. Working Static Pressure	600 psig

APPLICATIONS

- Settings which include caustic liquid or gaseous media and/or low temperature gases
- Filters
- Flow indicators
- Heat exchangers
- Back flow indicators
- Hydraulic and pneumatic systems
- Water treatment systems
- Pumps and compressors
- Cryogenic gases and corrosive media

ORDERING INFORMATION

GAUGE SIZE & SERIES	**45 - 13**	4 1/2 Inch	**60 - 13**	6 Inch				
CONNECTION LOCATION	**0**	Top & bottom						
	1	Back						
CONNECTION SIZE	**2**	1/4″ NPT female						
PRESSURE RANGE	**W100**	0 to 100 inH_2O	**W400**	0 to 400 inH_2O	**P100**	0 to 100 psid	**P500**	0 to 500 psid
	W150	0 to 150 inH_2O	**P15**	0 to 15 psid	**P230**	0 to 230 psid	**P600**	0 to 600 psid
	W200	0 to 200 inH_2O	**P30**	0 to 30 psid	**P300**	0 to 300 psid		
	W300	0 to 300 inH_2O	**P60**	0 to 60 psid	**P400**	0 to 400 psid		
SENSOR HOUSING MATERIAL	**S**	316L Stainless steel						
O-RING MATERIAL	**1**	PTFE						
CASE MATERIAL	**A**	Aluminum, black	**S**	316L Stainless steel				
LENS	**1**	Acrylic	**2**	Safety glass				
FILL FLUID (optional)	**GY**	Glycerine	**SL**	Silicone	**HL**	Halocarbon		

Please consult your local NOSHOK Distributor or NOSHOK, Inc. for availability and delivery information.

EXAMPLE **45-13 0 2 - W100 - S 1 A - 2 - GY**

Gauge Size & Series	4-1/2 Inch–Series 1300
Connection Location	Top & Bottom
Connection Size	1/4″ NPT female
Pressure Range	0 to 100 inH_2O
Sensor Housing Material	316L Stainless steel
O-Ring Material	PTFE
Case Material	Aluminum, black
Lens	Safety glass
Fill Fluid (optional)	Glycerine

OUTLINE DIMENSIONS

PANEL CUT-OUT DIMENSIONS

4-1/2 Inch Gauge

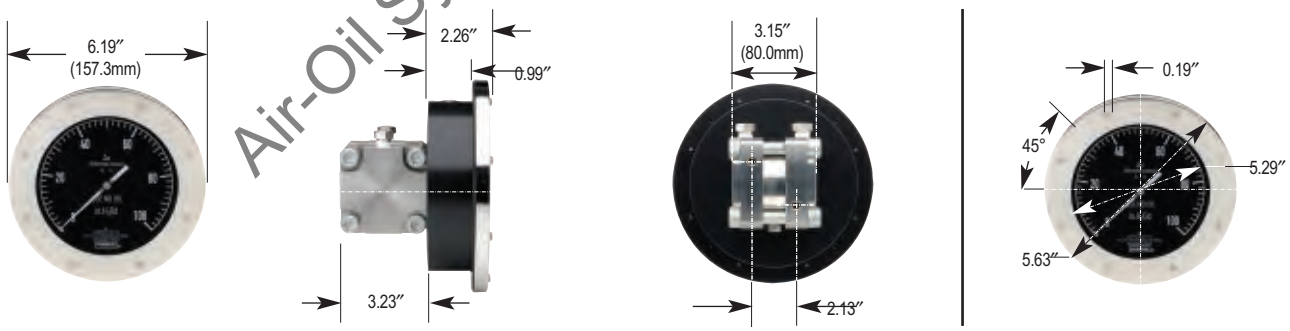

6 Inch Gauge

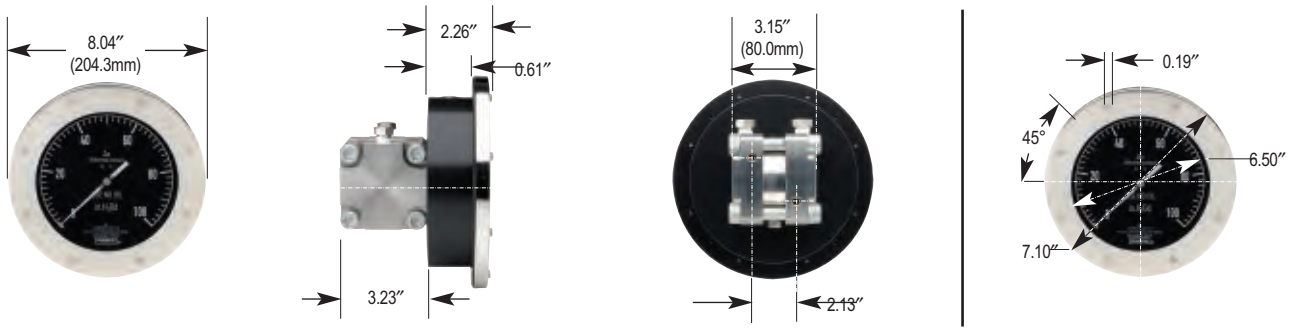

Dial Configuration Drawings

1000 Series 2-1/2″

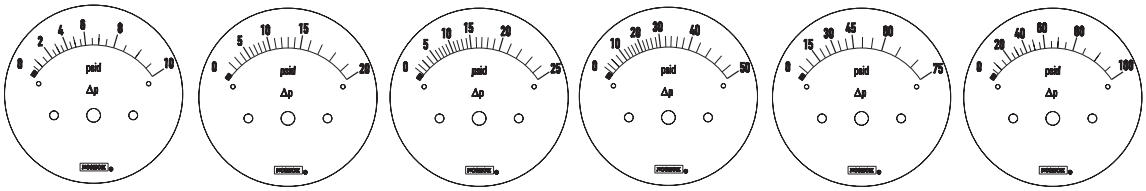

1000 Series 4-1/2″

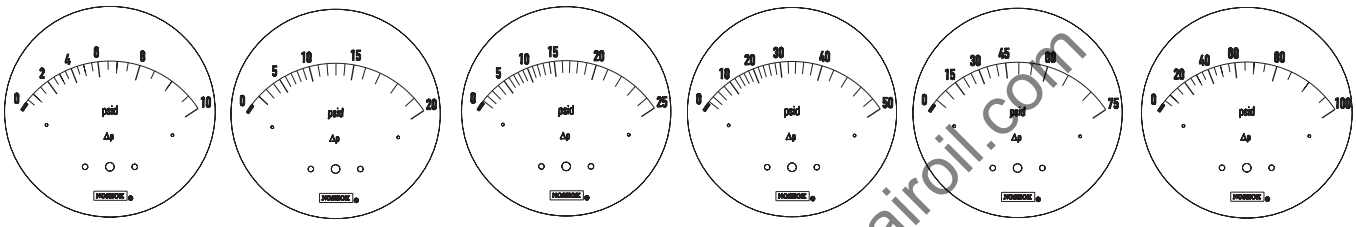

1100 Series 2-1/2″

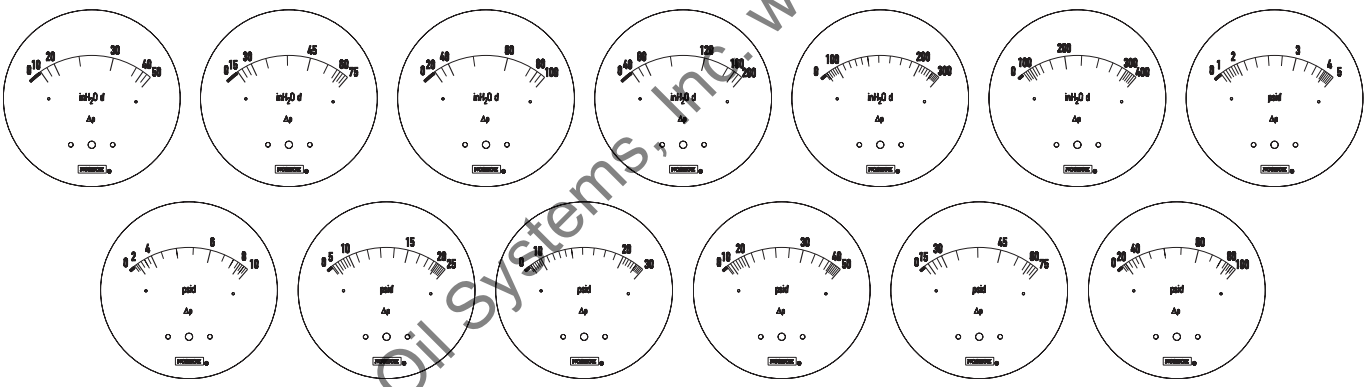

1100 Series 4-1/2″

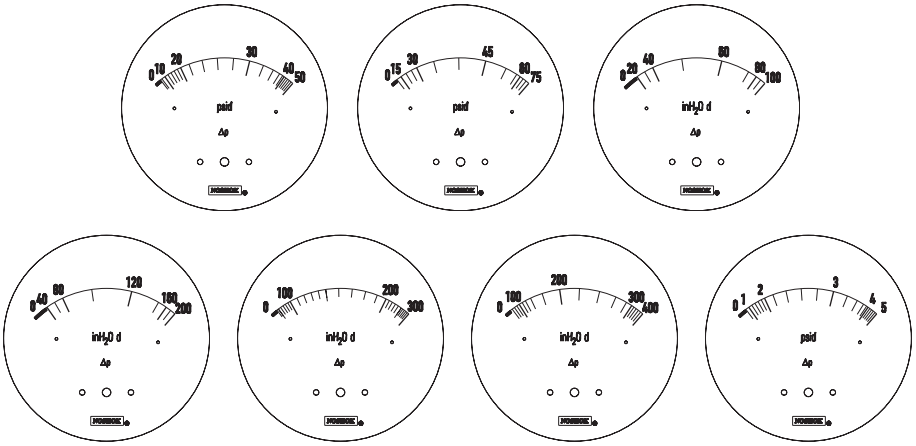

1100 Series 4-1/2″

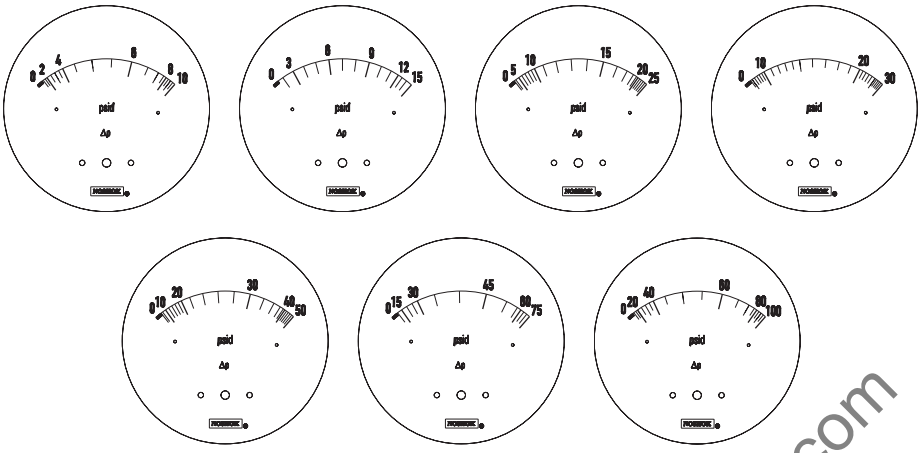

1200 Series 4-1/2″

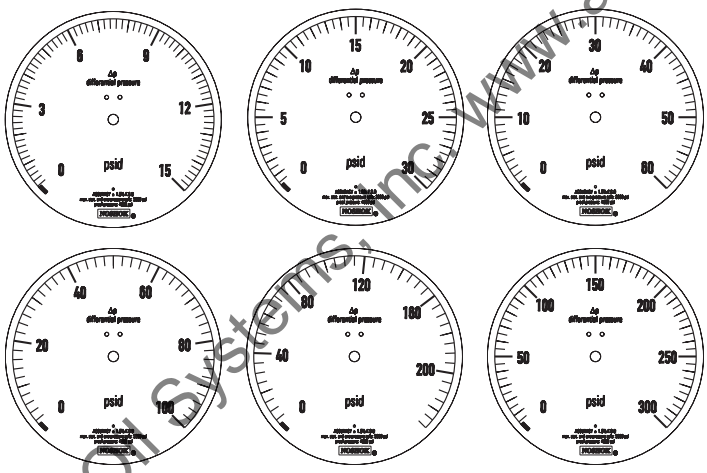

1300 Series 4-1/2″

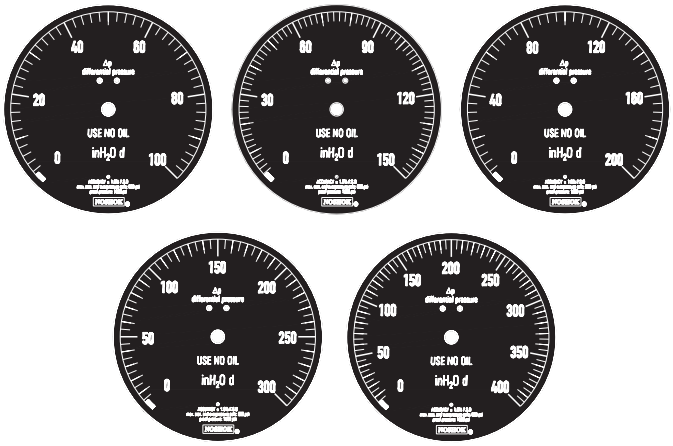

10 SERIES

- Meets current standards for 3A and ASME BPE-2009
- Compact size for space restricted applications
- Wide variety of ranges from vacuum to 600 psi
- Process temperatures up to 300°F (150°C)
- Gauge size 2 inch, Clamp size 3/4 inch
- Case and cover ring are electropolished Stainless steel for exceptional corrosion resistance, complemented with a polycarbonate lens
- Tri-Clamp® housing and diaphragm are constructed from 316L Stainless steel with wetted surfaces electropolished to Ra25 or better
- 316L Stainless steel socket is welded to the Tri-Clamp® process connection for greater strength and durability
- C.I.P, S.I.P and Autoclave* for the demanding needs of the sanitary market

*Only dry case gauges are recommended for Autoclave

APPLICATIONS

- Food & beverage
- Dairy
- Pharmaceutical
- Biomedical

	SPECIFICATIONS
Case	2 Electropolished 304 Stainless steel
Cover Ring	Electropolished 304 Stainless steel
Lens	Polycarbonate
Bourdon Tube	316 Stainless steel
Socket	316L Stainless steel welded to process connection
Movement	Stainless steel
Accuracy	±2.5% Full Scale, ANSI grade B
Pointer	Aluminum, black finish
Dial	Aluminum, white background, black print
Process Connection	3/4 Tri Clamp® sanitary seal
Seal Housing Material	316L Stainless steel
Diaphragm Material	316L Stainless steel, electropolished to Ra25 or better
Fill Fluid	Glycerine, USP grade
Media Temperature	40°F to 300°F (40°C to 150°C)

***Note:** Autoclave requires the addition of optional laminated safety glass lens

Diaphragm seal must be installed facing downward or in a vertical position for drainability. Do not install diaphragm seal facing in an upward position.

ORDERING INFORMATION						
SERIES	100	Series 10 fractional				
CLAMP SIZE	06	3/4 Inch				
SEAL FILL FLUID	1	Glycerine	Other Food Grade Quality Fill Fluids Available		Please Consult Factory	
GAUGE SIZE	20	2 Inch				
PRESSURE RANGE	40	0 psig to 15 psig	49	0 psig to 100 psig	61	0 psig to 300 psig
	43	0 psig to 30 psig	55	0 psig to 160 psig	64	0 psig to 400 psig
	46	0 psig to 60 psig	58	0 psig to 200 psig	70	0 psig to 600 psig
OPTION	3	Safety glass lens	Required for autoclave applications			

Please consult your local NOSHOK Distributor or NOSHOK, Inc. for availability and delivery information.

EXAMPLE **100 - 06 - 1 - 20 - 40 - 3**

Series	Series 10 fractional, bottom mount
Clamp Size	3/4 Tri-clamp®
Seal Fill Fluid	Glycerine (USP food grade)
Gauge Size	2 gauge
Pressure Range	0 psig to 15 psig
Option	Safety glass lens

OUTLINE DIMENSIONS

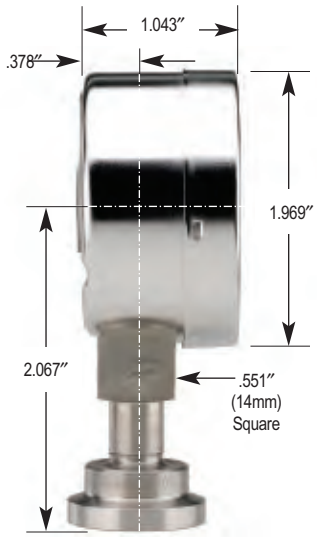

Heavy Duty

10 SERIES

- Meets current standards for 3A and ASME BPE-2009
- Ranges from -30 inHg to 0 psi through -30 inHg to 600 psi
- 2-1/2 and 4 inch sizes available, with 1-1/2 or 2 inch Tri-Clamp® process connections
- Electropolished 304 Stainless steel case with welded 316LSS socket and Tri-Clamp® process connection
- 316L Stainless steel wetted materials electropolished to Ra25 or better for outstanding performance
- Optional liquid filling lubricates gauge internals and extends service life by dampening the effects of vibration, pulsation and shock
- Optional Maximum Indicating Pointer or Adjustable Pointer
- Exceptional corrosion resistance
- C.I.P, S.I.P and Autoclave* for the demanding needs of the sanitary market

*Only dry case gauges are recommended for Autoclave

APPLICATIONS

- Food & beverage
- Dairy
- Pharmaceutical

SPECIFICATIONS	
Case	Electropolished 304 Stainless steel
Bayonet Ring	Electropolished 304 Stainless steel
Lens	Laminated safety glass
Bourdon Tube	316 Stainless steel "C" tube
Socket	316L Stainless steel, welded to case & process connection
Movement	Stainless steel
Accuracy	2 1/2 gauge ±1.5% Full Scale, ANSI grade A 4 gauge ±1.0% Full Scale, ANSI grade 1A
Pointer	Balanced aluminum, black finish
Dial	Aluminum, white background, black print
Gauge Fill Fluid	Glycerine, USP grade (optional)
Process Connection	1 1/2 or 2 Tri clamp® sanitary seal
Seal Housing Material	316L Stainless steel
Diaphragm Material	316L Stainless steel, electropolished to Ra25 or better
Fill Fluid	Glycerine, USP grade
Media Temperature	40°F to 300°F (40°C to 150°C)

Diaphragm seal must be installed facing downward or in a vertical position for drainability. Do not install diaphragm seal facing in an upward position.

ORDERING INFORMATION

SERIES	**100**	Series 10 heavy duty						
CLAMP SIZE	**12**	1 1/2 Inch	**16**	2 Inch				
SEAL FILL FLUID	**1**	Glycerine	**Other Food Grade Quality Fill Fluids Available**			**Please Consult Factory**		
GAUGE SIZE	**25**	2 1/2 Inch	**40**	4 Inch				
PRESSURE RANGE	**01**	-30 inHg to 0 psig*	**13**	-30 inHg to 100 psig	**40**	0 psig to 15 psig*	**55**	0 psig to 160 psig
	04	-30 inHg to 15 psig	**16**	-30 inHg to 160 psig	**43**	0 psig to 30 psig	**58**	0 psig to 200 psig
	07	-30 inHg to 30 psig	**19**	-30 inHg to 200 psig	**46**	0 psig to 60 psig	**61**	0 psig to 300 psig
	10	-30 inHg to 60 psig	**22**	-30 inHg to 300 psig	**49**	0 psig to 100 psig	**64**	0 psig to 400 psig
					70	0 psig to 600 psig		
GAUGE FILL	**0**	None	**1**	Glycerine (All Food Grade Quality Fill Fluids)	**2**	Silicone	**3**	Mineral oil
GAUGE OPTIONS	**0**	None	**1**	Max. indicating pointer	**2**	Adjustable pointer		

* Not available on 4 gauge and 1 1/2 Tri Clamp®

Please consult your local NOSHOK Distributor or NOSHOK, Inc. for availability and delivery information.

EXAMPLE **100 - 12 - 1 - 25 - 55 - 1 - 1**

Series	Series 10 sanitary gauge, bottom mount
Clamp Size	1-1/2 Tri-clamp®
Seal Fill Fluid	Glycerine (USP food grade)
Gauge Size	2-1/2 gauge
Pressure Range	0 psig to 160 psig
Gauge Fill	Glycerine
Option	Maximum indicating pointer

OUTLINE DIMENSIONS

4 Gauge with 2 Tri-Clamp® Connection

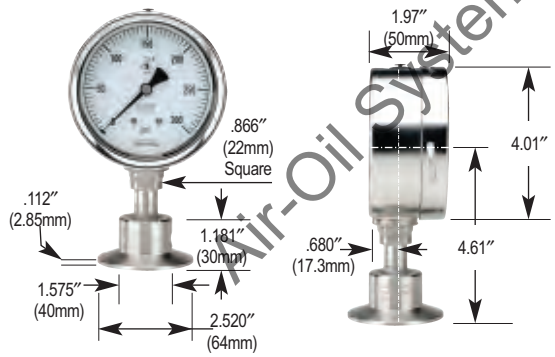

4 Gauge with 1-1/2 Tri-Clamp® Connection

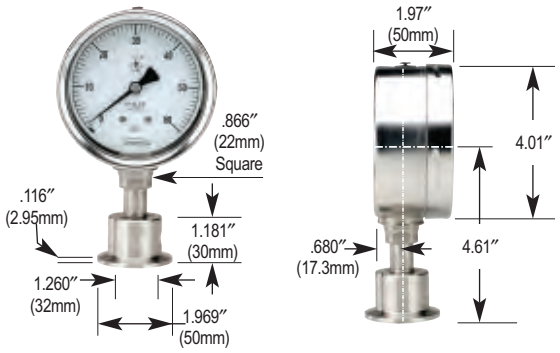

2-1/2 Gauge with 2 Tri-Clamp® Connection

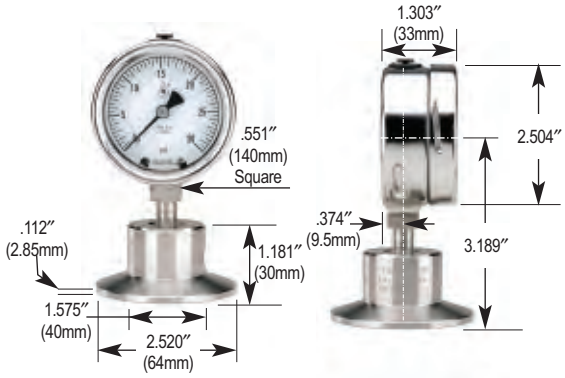

2-1/2 Gauge with 1-1/2 Tri-Clamp® Connection

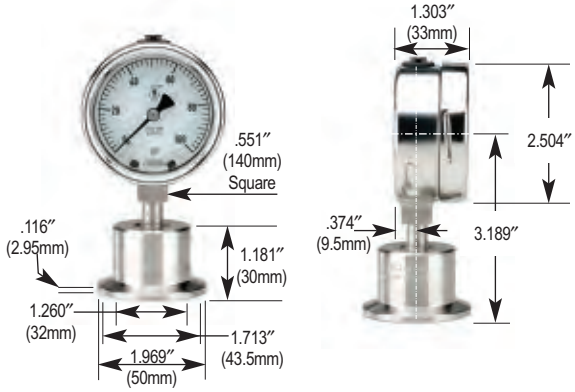

Homogenizer

20 SERIES

- Meets current standards for 3A and ASME BPE-2009
- Ranges from 1,000 psi to 15,000 psi
- Process temperatures up to 300°F for use in more applications
- 4 inch size with 1-1/8 inch flanged process connection
- Electropolished 304 Stainless steel case with welded 316L Stainless steel socket and process connection for greater performance in high pressure applications
- 316L Stainless steel wetted materials electropolished to Ra25 or better
- Scratch-resistant laminated safety glass provides clear viewing without discoloring
- Optional liquid filling lubricates gauge internals and extends service life by dampening the effects of vibration, pulsation and shock
- C.I.P, S.I.P and Autoclave* for the demanding needs of the sanitary market

*Only dry case gauges are recommended for Autoclave

APPLICATIONS

- High pressure applications in:
  - Dairy
  - Food
  - Chemical
  - Biotechnology
  - Pharmaceutical

SPECIFICATIONS

Case	Electropolished 304 Stainless steel
Bayonet Ring	Electropolished 304 Stainless steel
Lens	Laminated safety glass
Bourdon Tube	316 Stainless steel coiled safety tube
Socket	316L Stainless steel, welded to case & process connection
Movement	Stainless steel
Accuracy	±1.0% Full Scale, ANSI grade 1A
Pointer	Balanced aluminum, black finish
Dial	Aluminum, white background, black print
Gauge Fill Fluid	Glycerine, USP grade
Mounting	Flange mounted
Process Connection	1 1/8 Homogenizer flange
Seal Housing Material	316L Stainless steel
Diaphragm Material	316L Stainless steel, electropolished to Ra25 or better
Fill Fluid	Glycerine, USP grade
Media Temperature	40°F to 300°F (40°C to 150°C)

Diaphragm seal must be installed facing downward or in a vertical position for drainability. Do not install diaphragm seal facing in an upward position.

ORDERING INFORMATION								
SERIES	**200**	Series 20 homogenizer						
CLAMP SIZE	**42**	1 1/8 Inch flange						
SEAL FILL FLUID	**1**	Glycerine	**Other Food Grade Quality Fill Fluids Available**		**Please Consult Factory**			
GAUGE SIZE	**40**	4 Inch						
PRESSURE RANGE	**73** **76**	0 psig to 1000 psig 0 psig to 1500 psig	**79** **82**	0 psig to 2000 psig 0 psig to 3000 psig	**85** **88**	0 psig to 5000 psig 0 psig to 6000 psig	**91** **94**	0 psig to 10000 psig 0 psig to 15000 psig
GAUGE FILL	**0**	None	**1**	Glycerine	**2**	Silicone	**3**	Mineral oil
				(All Food Grade Quality Fill Fluids)				
GAUGE OPTIONS	**0**	None	**1**	Max. indicating pointer	**2**	Adjustable pointer		

Please consult your local NOSHOK Distributor or NOSHOK, Inc. for availability and delivery information.

EXAMPLE **200 - 42 - 1 - 40 - 91 - 1 - 1**

Series	Series 20 homogenizer gauge, bottom mount
Clamp Size	1-1/8 Inch flange
Seal Fill Fluid	Glycerine (USP food grade)
Gauge Size	4 Inch gauge
Pressure Range	0 psig to 10000 psig
Gauge Fill	Glycerine
Option	Maximum indicating pointer

OUTLINE DIMENSIONS

4 Gauge with 1-1/8 Homogenizer Flange

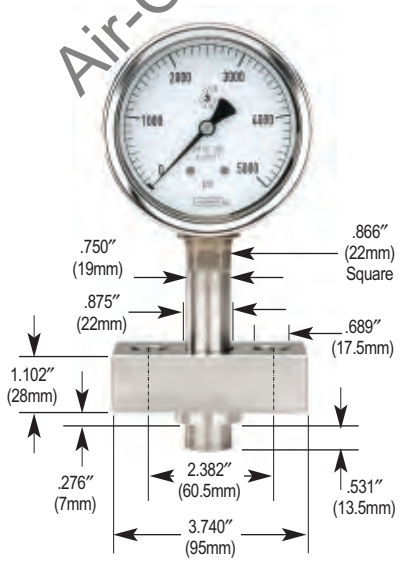

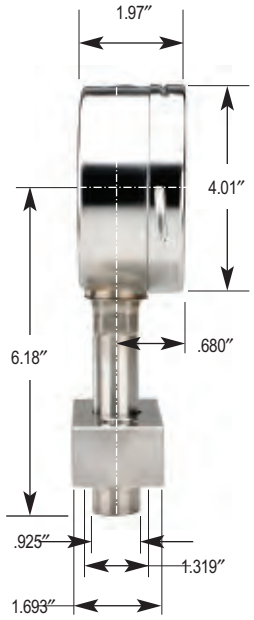

(Custom Flange Dimensions are Available to your Specifications – Please Consult Factory)

Diaphragm Seals

TYPE 10, 10H & 10H1

- Designed to isolate the pressure measuring instrument from high temperatures, or corrosive or viscous process media
- Maximum pressure rating is 2,000 psi
- Utilizes a replaceable diaphragm clamped between the flanged metal housings with an o-ring seal to create a leak-free union
- Process connection sizes from 1/4 inch NPT through 1-1/2 inch NPT
- Flushing port connection is an available option that allows the wetted areas of the seal to be cleaned, or the process vented without removing the unit from the line
- Consider gauge size, pressure range, media composition, ambient and operating temperature, and maximum working pressure when selecting
- For process temperatures over 212° F a capillary or cooling element is recommended, contact factory to order
- Fill fluid must be compatible with process media; i.e. Glycerine may become volatile in conjunction with a strong oxidizing agent such as chlorine, forms of oxygen or peroxide and nitric acids

PRODUCT SPECIFICATIONS

Suitable Pressure Gauge Sizes	2 1/2, 4, 4 1/2 and 6 Inch Will also operate with most transducers, transmitters and pressure switches
Minimum Working Pressure	**10:** 0 psig to 30 psig through 30 inHg to 2,000 psig **10H, 10H1:** 0 psig to 30 psig through 0 psig to 10,000 psig
Maximum Working Pressure	**10:** 2,000 psig @ 100 °F **10H, 10H1:** 5,000 psig, 10,000 psig, @ 100 ºF
Operating Temperature	30°F 350°F based upon material of construction and fill fluid

Fill Fluid Temperature Table

Fill Fluid	Temperature Range (°F)
Glycerine*	30 300
Silicone 200 10	35 450
Silicone 704	30 - 520
Silicone 710	30 650
Silicone 550	-40 - 600
Silicone 510	60 400
Fluorolube FS-5	-40 - 500
Silicone 200 350	0 300
Halocarbon Oil 6.3	-40 - 400
Ethylene Glycol	30 300
Propylene Glycol	-50 - 200
Syltherm 800	40 450
Mineral Oil	Note 1
Neobee M 20	40 320

*Not recommended for use on vacuum applications
Note 1. To be advised

ORDERING INFORMATION

TYPE	**10**	2,000 psi	**10H**	5,000 psi	**10H1**	10,000 psi		
INSTRUMENT CONNECTION SIZES	**02** **04**	1/4 inch NPT 1/2 inch NPT						
UPPER HOUSING MATERIAL	**C** **S**	Carbon Steel 316 Stainless Steel						
DIAPHRAGM MATERIAL	**A** **H**	Tantalum Hastelloy C 276	**M** **N**	Monel 400 Inconel 600	**S** **T**	316 Stainless Steel Teflon® [2]	**U** **V**	Titanium Grade 4 Viton® [2]
O-RING MATERIAL	**B**	Buna N	**T**	Teflon® [2]	**V**	Viton®		
PROCESS CONNECTION SIZES	**02** **04**	1/4 Inch NPT 1/2 Inch NPT (ASME and DIN Flanges Available Upon Request)	**06** **08**	3/4 Inch NPT 1 Inch NPT	**10** **12**	1-1/4 Inch NPT 1-1/2 Inch NPT		
LOWER HOUSING MATERIAL	**C** **H**	Carbon Steel Hastelloy C 276	**M** **N**	Monel 400 Inconel 600	**S** **U**	316 Stainless Steel Titanium [2]		
FLUSHING CONNECTION[1]	**1F** **2F**	1/8 Inch NPT 1/4 Inch NPT						

1) Not available on 10,000 psi model. 2) Not available on 10H or 10H1

NOTE: For process temperatures over 212°F, a capillary or cooling element is recommended. Contact NOSHOK factory to order.

EXAMPLE **10 – 02 S – S – B – 04 S – 1F**

Model Selection	Type 10
Instrument Connection Size	1/4 Inch NPT
Upper Housing Material	316 Stainless Steel
Diaphragm Material	316 Stainless Steel
O-ring Material	Buna N
Process Connection Size	1/2 Inch NPT
Lower Housing Material	316 Stainless Steel
Flushing Connection	(Optional)

OUTLINE DIMENSIONS

Type 10 Standard Pressure Diaphragm Seal

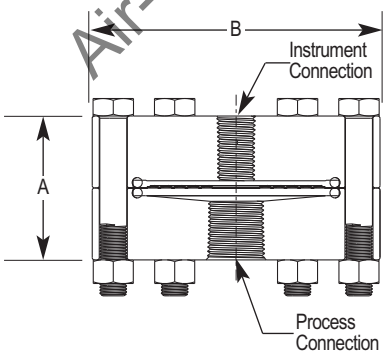

Dimensional Data
Process Connection Size

	1/4	1/2 3/4	1 1-1/2
A	2.00	2.00	2.00
B	4.00	4.00	4.00

Type 10H Elevated Pressure Diaphragm Seal

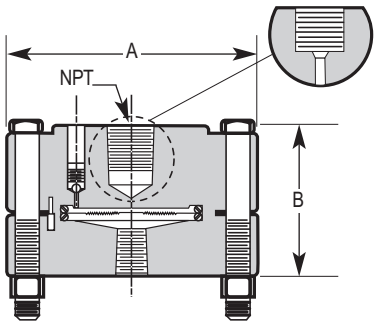

Dimensional Data
Process Connection Size

Pressure Rating	1/4		3/8 - 1 1/2	
	A	B	A	B
5000	4.0	2.13	4.0	2.13

Diaphragm Seals

TYPE 10L

- Designed for applications where typical metallic lower housings cannot withstand process media
- Maximum pressure rating is 200 psi
- Utilizes a replaceable diaphragm clamped between the flanged housings with an O-ring seal to create a leak-free union
- Process connection sizes from 1/4 inch NPT through 1-1/2 inch NPT
- Consider gauge size, pressure range, media composition, ambient and operating temperature, and maximum working pressure when selecting
- Fill fluid must be compatible with process media; i.e. Glycerine may become volatile in conjunction with a strong oxidizing agent such as chlorine, forms of oxygen or peroxide and nitric acids

PRODUCT SPECIFICATIONS	
Suitable Pressure Gauge Sizes	2 1/2, 4, 4 1/2 and 6 Inch Will also operate with most transducers, transmitters and pressure switches
Minimum Working Pressure	0 psig to 30 psig through 30 inHg to 200 psig
Maximum Working Pressure	200 psig @ 140 ºF
Operating Temperature	140°F MAX

Fill Fluid Temperature Table

Fill Fluid	Temperature Range (°F)
Glycerine*	30 300
Silicone 200 10	35 450
Silicone 704	30 - 520
Silicone 710	30 650
Silicone 550	-40 - 600
Silicone 510	60 400
Fluorolube FS-5	-40 - 500
Silicone 200 350	0 300
Halocarbon Oil 6.3	-40 - 400
Ethylene Glycol	30 300
Propylene Glycol	-50 - 200
Syltherm 800	40 450
Mineral Oil	Note 1
Neobee M 20	40 320

*Not recommended for use on vacuum applications
Note 1. To be advised

ORDERING INFORMATION

TYPE	**10L**	200 psi						
INSTRUMENT CONNECTION SIZES	**02** **04**	1/4 inch NPT 1/2 inch NPT						
UPPER HOUSING MATERIAL	**C** **S**	Carbon Steel 316 Stainless Steel						
DIAPHRAGM MATERIAL	**A** **H**	Tantalum Hastelloy C 276	**M** **N**	Monel 400 Inconel 600	**S** **T**	316 Stainless Steel Teflon®	**U** **V**	Titanium Grade 4 Viton®
O-RING MATERIAL	**B**	Buna N	**T**	Teflon®	**V**	Viton®		
PROCESS CONNECTION SIZES	**02** **04**	1/4 Inch NPT 1/2 Inch NPT	**06** **08**	3/4 Inch NPT 1 Inch NPT	**10** **12**	1 1/4 Inch NPT 1 1/2 Inch NPT		
			(ASME and DIN Flanges Available Upon Request)					
LOWER HOUSING MATERIAL	**KN** **PP**	Kynar Polypropylene	**PV** **TC**	PVC Teflon® (Carbon Filled)	**TG**	Teflon® (Glass Filled)		

EXAMPLE **10L – 02 S – T – V – 04 PP**

Model Selection	Type 10L
Instrument Connection Size	1/4 Inch NPT
Upper Housing Material	316 Stainless Steel
Diaphragm Material	Teflon®
O-ring Material	Viton®
Process Connection Size	1/2 Inch NPT
Lower Housing Material	Polypropylene

OUTLINE DIMENSIONS

Type 10L Reduced Pressure Diaphragm Seal

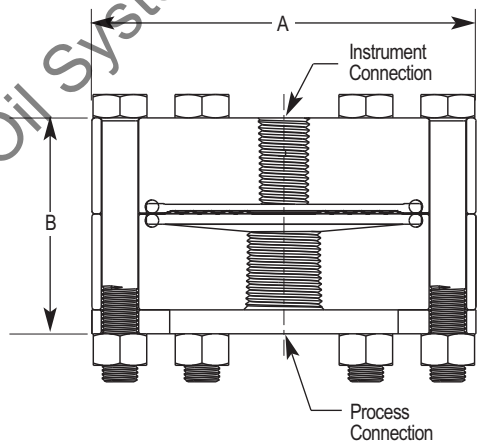

Dimensional Data
Process Connection Size

	1/4	1/2 3/4	1 1-1/2
A	4.00	4.00	4.00
B **Teflon Glass**	2.25	2.25	2.25
B **PVC Kynar**	2.00	2.00	2.00

Diaphragm Seals

TYPE 12

- Features a flush mount diaphragm and all welded construction, ideal for food & beverage, pharmaceutical and sanitary markets
- Wetted parts and all welded housing are constructed of 316 stainless steel for greater strength and durability
- Minimum working pressure 0 to 30 psi through -30 inHg to 600 psig
- Accommodates process connection pipes from 1-1/2 inch through 3 inch sizes
- Accommodates 2-1/2, 4, 4-1/2 and 6 inch gauge sizes
- Clamped connection allows ease of installation and removal of seal for maintenance and cleaning
- Wetted materials polished to Ra 32 or better
- Consider gauge size, pressure range, media composition, ambient and operating temperature, and maximum working pressure when selecting
- For process temperatures over 212° F a capillary or cooling element is recommended, contact factory to order
- Fill fluid must be compatible with process media; i.e. Glycerine may become volatile in conjunction with a strong oxidizing agent such as chlorine, forms of oxygen or peroxide and nitric acids

PRODUCT SPECIFICATIONS	
Suitable Pressure Gauge Sizes	2 1/2, 4, 4 1/2 and 6 Inch Will also operate with most transducers, transmitters and pressure switches
Minimum Working Pressure	0 psig to 30 psig through 30 inHg to 600 psig
Maximum Working Pressure	Maximum Operating Pressure is Determined by the Clamping Device and Piping System Please Consult Factory
Operating Temperature	Refer to fill fluid expansion factors table below

Note: NOSHOK pressure transmitters or transducers are not to be used in heat sterilization systems as stated in 3A Standard 74 03 paragraph D10.1.2

Diaphragm seal must be installed facing downward or in a vertical position for drainability. Do not install diaphragm seal facing in an upward position.

Fill Fluid Temperature Table

Fill Fluid	Temperature Range (°F)
Glycerine*	30 300
Silicone 200 10	35 450
Silicone 704	30 - 520
Silicone 710	30 650
Silicone 550	-40 - 600
Silicone 510	60 400
Fluorolube FS-5	-40 - 500
Silicone 200 350	0 300
Halocarbon Oil 6.3	-40 - 400
Ethylene Glycol	30 300
Propylene Glycol	-50 - 200
Syltherm 800	40 450
Mineral Oil	Note 1
Neobee M 20	40 320

*Not recommended for use on vacuum applications
Note 1. To be advised

ORDERING INFORMATION								
TYPE	12*							
INSTRUMENT CONNECTION SIZES	02 04	1/4 inch NPT 1/2 inch NPT						
UPPER HOUSING MATERIAL	S	316 Stainless Steel						
DIAPHRAGM MATERIAL	S	316 Stainless Steel						
SANITARY PIPE SIZES	12	1 1/2 Inch	16	2 Inch	20	2 1/2 Inch	24	3 Inch
SANITARY SEAL CLAMPS & GASKETS								
SS LADISH TRI-CLAMP	CR12	1 1/2 Inch	CR16	2 Inch	CR20	2 1/2 Inch	CR24	3 Inch
BUNA GASKET	BG12	1 1/2 Inch	BG16	2 Inch	BG20	2 1/2 Inch	BG24	3 Inch
TEFLON GASKET	TG12	1 1/2 Inch	TG16	2 Inch	TG20	2 1/2 Inch	TG24	3 Inch

NOTE: For process temperatures over 212°F, a capillary or cooling element is recommended. Contact NOSHOK factory to order.

***Operating pressure is determined by the clamping device and piping system — Please consult factory.**

EXAMPLE **12 – 02 S – S – 20 – CR20 – BG20**

Model Selection	Type 12
Instrument Connection Size	1/4 Inch NPT
Upper Housing Material	316 Stainless Steel
Diaphragm Material	316 Stainless Steel
Sanitary Pipe Size	2-1/2 Inch
SS Ladish Tri-Clamp (Optional)	2-1/2 Inch Clamp
Gasket Material (Optional)	Buna gasket

OUTLINE DIMENSIONS

Type 12 Ladish Tri-Clamp Sanitary Seal

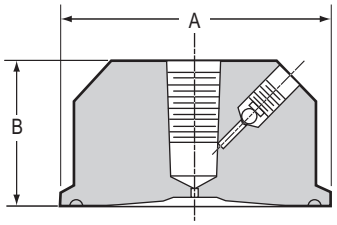

Nominal pipe size	1.5	2	3
Diaphragm Diameter Inches	1.4	1.9	2.4
A	1.984	2.516	3.579
B	1.25	1.25	1.25

Diaphragm Seals

TYPE 20

- Designed for applications requiring an NPT male threaded process connection and with a flush diaphragm
- Flush diaphragm construction prevents clogging and process material build-up
- Constructed with a 316 stainless steel housing and diaphragm for strength and durability
- Maximum pressure rating is 9,000 psi
- Available instrument connection sizes are 1/4 and 1/2 inch with a process connection size of 1/2 inch NPT male to 2 inch NPT male
- Consider gauge size, pressure range, media composition, ambient and operating temperature, and maximum working pressure when selecting
- For process temperatures over 212° F a capillary or cooling element is recommended, contact factory to order
- Fill fluid must be compatible with process media; i.e. Glycerine may become volatile in conjunction with a strong oxidizing agent such as chlorine, forms of oxygen or peroxide and nitric acids

PRODUCT SPECIFICATIONS	
Suitable Pressure Instrument	Will operate with most transducers, transmitters and pressure switches
Minimum Working Pressure	0 psig to 30 psig through 0 psig to 9,000 psig*
Maximum Working Pressure	9,000 psig @ 100 ºF
Operating Temperature	Refer to fill fluid expansion factors table below

* Depending on process connection size

Fill Fluid Temperature Table

Fill Fluid	Temperature Range (°F)
Glycerine*	30 300
Silicone 200 10	35 450
Silicone 704	30 - 520
Silicone 710	30 650
Silicone 550	-40 - 600
Silicone 510	60 400
Fluorolube FS-5	-40 - 500
Silicone 200 350	0 300
Halocarbon Oil 6.3	-40 - 400
Ethylene Glycol	30 300
Propylene Glycol	-50 - 200
Syltherm 800	40 450
Mineral Oil	Note 1
Neobee M 20	40 320

*Not recommended for use on vacuum applications
Note 1. To be advised

ORDERING INFORMATION						
TYPE	20	9,000 psi				
INSTRUMENT CONNECTION SIZES	02	1/4 inch NPT				
	04	1/2 inch NPT				
HOUSING MATERIAL	S	316 Stainless Steel				
DIAPHRAGM MATERIAL	S	316 Stainless Steel				
PROCESS CONNECTION SIZES	04	1/2 Inch NPT	08	1 Inch NPT	16	2 Inch NPT
	06	3/4 Inch NPT	12	1 1/2 Inch NPT		

NOTE: For process temperatures over 212°F, a capillary or cooling element is recommended. Contact NOSHOK factory to order.

EXAMPLE **20 – 02 S – S – 06**

Model Selection	Type 20
Instrument Connection Size	1/4 Inch NPT
Housing Material	316 Stainless Steel
Diaphragm Material	316 Stainless Steel
Process Connection Size	3/4 Inch NPT

OUTLINE DIMENSIONS

Type 20 Front Flush Style Diaphragm Seal

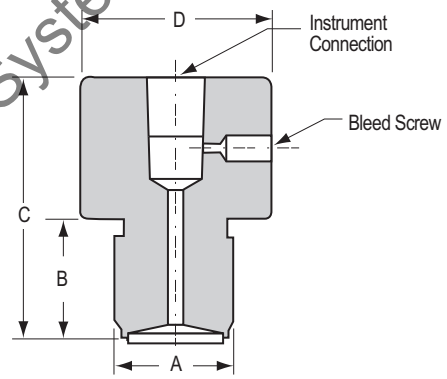

A	B	C	D
1/2 NPT	0.8	1.9	1.50
3/4 NPT	0.8	1.8	1.63
1 NPT	1.1	2.5	1.75
1 1/2 NPT	1.2	2.0	2.00
2 NPT	1.2	2.4	2.63

Diaphragm Seals

TYPE 25/25H

- Designed to isolate the pressure measuring instrument from corrosive or viscous process media
- Utilize an all welded, all metallic housing design to eliminate potential leak paths
- Maximum pressure rating is 2,500 psi
- For use with gauges with dial sizes of 2-1/2 inches and smaller, and pressure ranges no less than 100 psig
- Housing and diaphragm offered in a variety of materials to suit most applications
- A flushing port is available to clean wetted areas and prevent process media build up
- Consider gauge size, pressure range, media composition, ambient and operating temperature, and maximum working pressure when selecting
- For process temperatures over 212° F a capillary or cooling element is recommended, contact factory to order
- Fill fluid must be compatible with process media; i.e. Glycerine may become volatile in conjunction with a strong oxidizing agent such as chlorine, forms of oxygen or peroxide and nitric acids

PRODUCT SPECIFICATIONS

Suitable Pressure Gauge Sizes	2 1/2 Inch Will also operate with most transducers, transmitters and pressure switches
Minimum Working Pressure	**25:** 0 psig to 100 psig through 0 psig to 2,500 psig **25H:** 0 psig to 100 psig through 0 psig to 5,000 psig
Maximum Working Pressure	**25:** 2,500 psig @ 100 ºF **25H:** 5,000 psig @ 100 ºF
Operating Temperature	Refer to fill fluid expansion factors table below

Fill Fluid Temperature Table

Fill Fluid	Temperature Range (°F)
Glycerine*	30 300
Silicone 200 10	35 450
Silicone 704	30 - 520
Silicone 710	30 650
Silicone 550	-40 - 600
Silicone 510	60 400
Fluorolube FS-5	-40 - 500
Silicone 200 350	0 300
Halocarbon Oil 6.3	-40 - 400
Ethylene Glycol	30 300
Propylene Glycol	-50 - 200
Syltherm 800	40 450
Mineral Oil	Note 1
Neobee M 20	40 320

*Not recommended for use on vacuum applications
Note 1. To be advised

ORDERING INFORMATION				
TYPE	**25**	2,500 psi	**25H**	5,000 psi
INSTRUMENT CONNECTION SIZES	**02** **04**	1/4 inch NPT 1/2 inch NPT		
UPPER HOUSING MATERIAL	**M** **P**	Monel 400 Carpenter 20	**S**	316 Stainless Steel
DIAPHRAGM MATERIAL	**H** **M**	Hastelloy C 276 Monel 400[1]	**P** **S**	Carpenter 20[1] 316 Stainless Steel
PROCESS CONNECTION SIZES	**02** **04**	1/4 Inch NPT 1/2 Inch NPT		
LOWER HOUSING MATERIAL	**H** **M**	Hastelloy C 276 Monel 400	**P** **S**	Carpenter 20 316 Stainless Steel
FLUSHING CONNECTION	**1F** **2F**	1/8 Inch NPT 1/4 Inch NPT		

1) When selecting a Monel or Carpenter 20 Diaphragm, the upper & lower housing must be the same material

NOTE: For process temperatures over 212°F, a capillary or cooling element is recommended. Contact NOSHOK factory to order.

EXAMPLE **25 – 02 P – P – 04 P – 1F**

Model Selection	Type 25
Instrument Connection Size	1/4 Inch NPT
Upper Housing Material	Carpenter 20
Diaphragm Material	Carpenter 20
Process Connection Size	1/2 Inch NPT
Lower Housing Material	Carpenter 20
Flushing Connection (Optional)	1/8 Inch NPT

OUTLINE DIMENSIONS

Type 25/25H All Welded Standard Pressure Diaphragm Seal

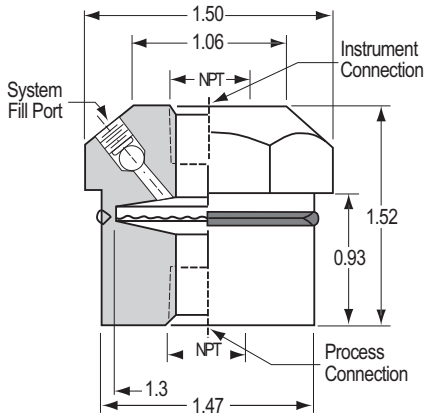

Diaphragm Seals

TYPE 29

- An off-line seal with a threaded connection and all welded, all metallic housing design that does not utilize an o-ring or gasket
- Designed with a larger diameter diaphragm for higher displacement capability
- Maximum pressure rating is 2,500 psi
- A variety of upper and lower housing and diaphragm materials are available to suit most applications
- A flushing port is available to clean wetted areas and prevent process media build up
- Consider gauge size, pressure range, media composition, ambient and operating temperature, and maximum working pressure when selecting
- For process temperatures over 212° F a capillary or cooling element is recommended, contact factory to order
- Fill fluid must be compatible with process media; i.e. Glycerine may become volatile in conjunction with a strong oxidizing agent such as chlorine, forms of oxygen or peroxide and nitric acids

PRODUCT SPECIFICATIONS

Suitable Pressure Gauge Sizes	2 1/2, 4 and 4 1/2 Inch Will also operate with most transducers, transmitters and pressure switches
Minimum Working Pressure	0 psig to 30 psig through 0 psig to 2,500 psig
Maximum Working Pressure	2,500 psig @ 100 °F
Operating Temperature	Refer to fill fluid expansion factors table below

Fill Fluid Temperature Table

Fill Fluid	Temperature Range (°F)
Glycerine*	30 300
Silicone 200 10	35 450
Silicone 704	30 - 520
Silicone 710	30 650
Silicone 550	-40 - 600
Silicone 510	60 400
Fluorolube FS-5	-40 - 500
Silicone 200 350	0 300
Halocarbon Oil 6.3	-40 - 400
Ethylene Glycol	30 300
Propylene Glycol	-50 - 200
Syltherm 800	40 450
Mineral Oil	Note 1
Neobee M 20	40 320

*Not recommended for use on vacuum applications
Note 1. To be advised

ORDERING INFORMATION				
TYPE	**29**	2,500 psi		
INSTRUMENT CONNECTION SIZES	**02** **04**	1/4 inch NPT 1/2 inch NPT		
UPPER HOUSING MATERIAL	**M** **P**	Monel 400 Carpenter 20	**S**	316 Stainless Steel
DIAPHRAGM MATERIAL	**H** **M**	Hastelloy C 276 Monel 400[1]	**P** **S**	Carpenter 20[1] 316 Stainless Steel
PROCESS CONNECTION SIZES	**02** **04**	1/4 Inch NPT 1/2 Inch NPT	**06** **08**	3/4 Inch NPT 1 Inch NPT
LOWER HOUSING MATERIAL	**H** **M**	Hastelloy C 276 Monel 400	**P** **S**	Carpenter 20 316 Stainless Steel
FLUSHING CONNECTION	**1F** **2F**	1/8 Inch NPT 1/4 Inch NPT		

1) When selecting a Monel or Carpenter 20 Diaphragm, the upper & lower housing must be the same material

NOTE: For process temperatures over 212°F, a capillary or cooling element is recommended. Contact NOSHOK factory to order.

EXAMPLE **29 – 02 S – S – 06 S – 1F**

Model Selection	Type 29
Instrument Connection Size	1/4 Inch NPT
Upper Housing Material	316 Stainless Steel
Diaphragm Material	316 Stainless Steel
Process Connection Size	3/4 Inch NPT
Lower Housing Material	316 Stainless Steel
Flushing Connection (Optional)	1/8 Inch NPT

OUTLINE DIMENSIONS

Type 29 High Displacement, All Welded Diaphragm Seal

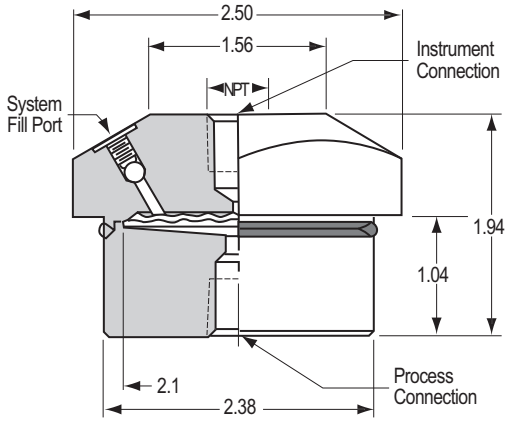

TYPE 30, 30H & 30H1

- Utilizes an all metallic diaphragm welded to the upper housing to allow field replacement of the lower housing while maintaining continuity of the measuring system
- A wide variety of instrument and process connections are available
- A flushing port is available to clean wetted areas and prevent process media buildup
- Consider gauge size, pressure range, media composition, ambient and operating temperature, and maximum working pressure when selecting
- For process temperatures over 212° F a capillary or cooling element is recommended, contact factory to order
- Fill fluid must be compatible with process media; i.e. Glycerine may become volatile in conjunction with a strong oxidizing agent such as chlorine, forms of oxygen or peroxide and nitric acids

PRODUCT SPECIFICATIONS

Suitable Pressure Gauge Sizes	2 1/2, 4, 4 1/2 and 6 Inch Will also operate with most transducers, transmitters and pressure switches
Minimum Working Pressure	**30:** 0 psig to 30 psig through 30″ Hg to 2,500 psig **30H, 30H1:** 0 psig to 30 psig through 0 psig to 10,000 psig
Maximum Working Pressure	**30:** 2,500 psig @ 100 ºF **30H, 30H1:** 5,000 psig, 10,000 psig @ 100 ºF
Operating Temperature	Refer to fill fluid expansion factors table below

Fill Fluid Temperature Table

Fill Fluid	Temperature Range (°F)
Glycerine*	30 300
Silicone 200 10	35 450
Silicone 704	30 - 520
Silicone 710	30 650
Silicone 550	-40 - 600
Silicone 510	60 400
Fluorolube FS-5	-40 - 500
Silicone 200 350	0 300
Halocarbon Oil 6.3	-40 - 400
Ethylene Glycol	30 300
Propylene Glycol	-50 - 200
Syltherm 800	40 450
Mineral Oil	Note 1
Neobee M 20	40 320

*Not recommended for use on vacuum applications
Note 1. To be advised

ORDERING INFORMATION								
TYPE	**30**	2,500 psi	**30H**	5,000 psi	**30H1**	10,000 psi		
INSTRUMENT CONNECTION SIZES	**02** **04**	1/4 inch NPT 1/2 inch NPT						
UPPER HOUSING MATERIAL	**C** **M**	Carbon Steel Monel 400	**P** **S**	Carpenter 20 316 Stainless Steel	**U**	Titanium Grade 4		
DIAPHRAGM MATERIAL	**A** **H**	Tantalum Hastelloy C 276	**M** **N**	Monel 400[1] Inconel 600	**P** **S**	Carpenter 20[1] 316 Stainless Steel	**U**	Titanium Grade 4[1]
SEAL GASKET MATERIAL	**H** **R**	Silver Plated HC (5,000 psi and above) Klingersil C 4401 (Rated to 1,500 psi)	**S** **T**	Silver Plated SS (5,000 psi and above) Teflon®			**V**	Viton®
PROCESS CONNECTION SIZES	**02** **04**	1/4 Inch NPT 1/2 Inch NPT (ASME and DIN Flanges Available Upon Request)	**06** **08**	3/4 Inch NPT 1 Inch NPT	**10** **12**	1-1/4 Inch NPT 1-1/2 Inch NPT		
LOWER HOUSING MATERIAL	**C** **H**	Carbon Steel Hastelloy C 276	**M** **N**	Monel 400 Inconel 600	**P** **S**	Carpenter 20 316 Stainless Steel	**U**	Titanium Grade 4
FLUSHING CONNECTION[2]	**1F**	1/8 Inch NPT	**2F**	1/4 Inch NPT				

1) When selecting a Monel 400, Carpenter 20 or Titanium Grade 4 Diaphragm, the upper housing must be the same material
2) Not available on 10,000 psi model.

NOTE: For process temperatures over 212°F, a capillary or cooling element is recommended. Contact NOSHOK factory to order.

EXAMPLE **30 – 04 S – S – R – 04 S –1F**

Model Selection	Type 30
Instrument Connection Size	1/2 Inch NPT
Upper Housing Material	316 Stainless Steel
Diaphragm Material	316 Stainless Steel
Seal Gasket Material	Klingersil C-4401
Process Connection Size	1/2 Inch NPT
Lower Housing Material	316 Stainless Steel
Flushing Connection (Optional)	1/8 Inch NPT

OUTLINE DIMENSIONS

Type 30 Standard Pressure Diaphragm Seal

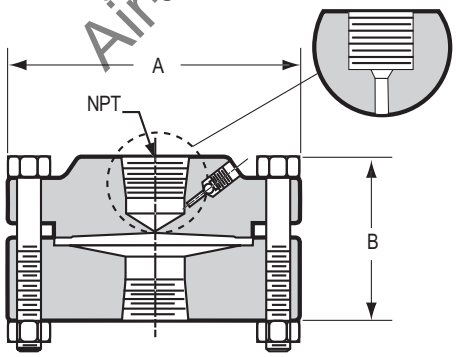

Dimensional Data
Process Connection Size

	1/8 - 1/4	3/8 1-1/2
A	3.5	3.5
B	1.56	2.00

Type 30H Elevated Pressure Diaphragm Seal

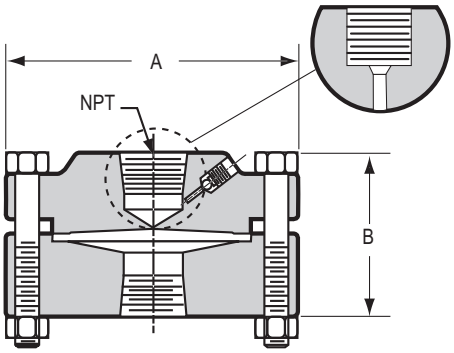

Dimensional Data
Process Connection Size

Pressure Rating	1/8 -1/4		3/8 -1/2	
	A	B	A	B
5000	4.0	2.25	4.0	2.25
10000	4.0	2.31	4.0	2.31

Diaphragm Seals

TYPE 30L

- Designed for lower pressure applications
- Utilizes an all metallic diaphragm welded to the upper housing to allow replacement of the non-metallic lower housing while maintaining continuity of the measuring system
- Maximum pressure rating is 200 psi
- A flushing port is available to clean wetted areas and prevent process media build up
- Consider gauge size, pressure range, media composition, ambient and operating temperature, and maximum working pressure when selecting
- Maximum temperature rating is 140° F
- Fill fluid must be compatible with process media; i.e. Glycerine may become volatile in conjunction with a strong oxidizing agent such as chlorine, forms of oxygen or peroxide and nitric acids

PRODUCT SPECIFICATIONS	
Suitable Pressure Gauge Sizes	2 1/2, 4, 4 1/2 and 6 Inch Will also operate with most transducers, transmitters and pressure switches
Minimum Working Pressure	0 psig to 30 psig through 30 Hg to 200 psig
Maximum Working Pressure	200 psig @ 140 °F
Operating Temperature	140°F MAX

Fill Fluid Temperature Table

Fill Fluid	Temperature Range (°F)
Glycerine*	30 300
Silicone 200 10	35 450
Silicone 704	30 - 520
Silicone 710	30 650
Silicone 550	-40 - 600
Silicone 510	60 400
Fluorolube FS-5	-40 - 500
Silicone 200 350	0 300
Halocarbon Oil 6.3	-40 - 400
Ethylene Glycol	30 300
Propylene Glycol	-50 - 200
Syltherm 800	40 450
Mineral Oil	Note 1
Neobee M 20	40 320

*Not recommended for use on vacuum applications
Note 1. To be advised

ORDERING INFORMATION								
TYPE	**30L**	200 psi						
INSTRUMENT CONNECTION SIZES	**02** **04**	1/4 inch NPT 1/2 inch NPT						
UPPER HOUSING MATERIAL	**C** **M**	Carbon Steel Monel 400	**P** **S**	Carpenter 20 316 Stainless Steel	**U**	Titanium Grade 4		
DIAPHRAGM MATERIAL	**A** **H**	Tantalum Hastelloy C 276	**M** **N**	Monel 400[1] Inconel 600	**P** **S**	Carpenter 20[1] 316 Stainless Steel	**U**	Titanium Grade 4[1]
SEAL GASKET MATERIAL	**R**	CGR 2750	**T**	Teflon®	**V**	Viton®		
PROCESS CONNECTION SIZES	**02** **04**	1/4 Inch NPT 1/2 Inch NPT	**06** **08**	3/4 Inch NPT 1 Inch NPT	(ASME and DIN Flanges Available Upon Request)			
LOWER HOUSING MATERIAL	**KN** **PP**	Kynar Polypropylene	**PV** **TC**	PVC Teflon® (Carbon Filled)	**TG**	Teflon® (Glass Filled)		

1) When selecting a Monel 400, Carpenter 20 or Titanium Grade 4 Diaphragm, the upper housing must be the same material

EXAMPLE **30L – 02 C – S – R – 06 PV**

Model Selection	Type 30L
Instrument Connection Size	1/4 Inch NPT
Upper Housing Material	Carbon Steel
Diaphragm Material	316 Stainless Steel
Seal Gasket Material	CGR 2750
Process Connection Size	3/4 Inch NPT
Lower Housing Material	PVC

OUTLINE DIMENSIONS

Type 30L Reduced Pressure Diaphragm Seal

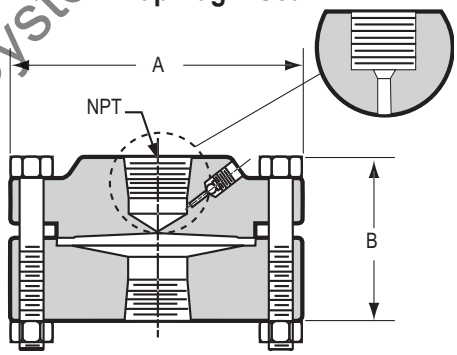

Dimensional Data
Process Connection Size

PVC-Kynar-Polypropylene			
	1/8 - 1/4	**3/8 -1**	**1-1/4 1-1/2**
A	4.0	4.0	4.0
B	2.00	2.00	2.00
Teflon-Glass/Carbon			
A	4.0	4.0	4.0
B	2.12	2.12	2.12

Options & Accessories by Gauge Series

100 SERIES STANDARD PRESSURE GAUGE OPTIONS & ACCESSORIES

• = Option/accessory is available
C = Consult factory for availability
N/C = No charge (consult factory for availability and minimum quantity)
STD = Standard stock model specification

MODEL NO.	15-100	15-110	15-120	20-100	20-110	20-120	20-148	25-100	25-110	25-120	40-100
CONNECTION											
Installed Panel Mount Clamp (PMC)		•	STD		•	STD			•	STD	
Uninstalled Panel Mount Clamp (15-110 PMC, 20-110 PMC, 25-110 PMC)		•	STD		•	STD			•	STD	
Polished Stainless Steel Bezel (SSB)		•	STD		•	STD			•	STD	
Black Rear Flange (BLRF)								•			•
Black Front Flange (BLFF) - ABS Case		•			•				•		•
Chrome Front Flange (CFF) - ABS Case		•			•				•		•
Black Front Flange (SBFF) - Steel Case	C			C	•				•		
Chrome Front Flange (SCFF) - Steel Case	C	•		C	•			•	•		
Black Steel Case (BSC)	C	•	STD	C	•			•	•		•
Stainless Steel Case (SSC)	C	•		C	•			•	•		
Chrome Case (CRC)	C	•		C	•			•	•		
Flat Sided ABS Case (FAC)		•			•				•		
Black Cover Ring (BCR)**	C	•		C	•			•	•		•
Stainless Steel Cover Ring (SSCR)**	C	•		C	•			•	•		
Chrome Cover Ring (CCR)**	C	•		C	•			•	•		•
Polished Chrome Cover Ring (PCCR)**	C			C							
Chrome Adapter Ring (CAR)		•			•	•			•	•	
Glass Lens (GL)*	C	N/C	•	C	N/C	•		N/C	N/C	•	N/C
Lexan Lens (LL)*								•	•		
Safety Glass Lens (SGL)*								•	•		•
Homalite Lens (HL)*			•			•				•	
Red Set Pointer (SP)**	•	C	C	•	•	C	•	•	•	C	•
Maximum Indicating Pointer (MIP)								C	C	C	
Silicone Dampened Movement (SDM)	C	C	C	C	C	C	C	C	C	C	C
Laser Marking (LM)	•	•	•	•	•	•	•	•	•	•	•
Stainless Steel Tagging (ST)	•	•	•	•	•	•	•	•	•	•	•
Orifice - Brass Press Fit Sintered (20 Micron) (CPO)	•	•	•	•	•	•	•	•	•	•	•
Orifice - Brass Press Fit - 0.1mm (BP1)	•	•	•	•	•	•	•	•	•	•	•
Orifice - Brass Press Fit - 0.3mm (BP3)	•	•	•	•	•	•	•	•	•	•	•
Orifice - Brass Press Fit - 0.8mm (BP8)	•	•	•	•	•	•	•	•	•	•	•

STANDARD ORIFICE FOR 100 SERIES GAUGE IS 0.3 MM PRESS FIT, UNLESS OTHERWISE SPECIFIED.

* A steel, stainless or chrome case & cover ring must be additionally ordered when lenses other than Plexiglass™ are utilized on all 100 Series models

** Only 110 Models require a steel, stainless or chrome case & cover ring to be additionally ordered when utilizing a set pointer or cover ring. Please consult factory when a set pointer is to be utilized on a 120 Model.

Consult factory for additional non-stock and special accessory availability.

200 SERIES LOW PRESSURE DIAPHRAGM (WATER COLUMN) GAUGE ACCESSORIES

• = Option/accessory is available
C = Consult factory for availability
STD = Standard stock model specification

MODEL NO.	25-200	25-210	25-224	40-200
CONNECTION				
Black Rear Flange (BLRF)	•			
304SS Rear Flange (SSRF)				•
Black Front Flange (BLFF)	•	•		•
304SS Front Flange (SSFF)				•
Chrome Front Flange (CFF)	•	•		
Stainless Steel Case (SSC)	•	•		STD
Glass Lens (GL)*	•	•		•
Safety Glass Lens (SGL)*	•	•		•
Plexiglass™ Lens (PL)	STD	STD		•
Recalibrator Lens (RL)	•	•		
Red Set Pointer (SP)	•	•	•	•
Maximum Indicating Pointer (MIP)	•	•	•	C
Overpressure Protection (OP)	C	C	C	C
SS Bezel w/U Clamp (SSB U)		•		
Black Bezel w/U Clamp (BB U)		•		
Black Cover Ring (BCR)	•	•		
Stainless Steel Cover Ring (SSCR)	•	•		STD
Chrome Cover Ring (CCR)	•	•		
Laser Marking (LM)	•	•	•	•
Stainless Steel Tagging (ST)	•	•	•	•
Orifice Brass Press Fit 0.3mm (BP3)		•	•	•
Orifice Brass Threaded 0.3mm (BT3)	•	•	•	•

STANDARD ORIFICE FOR 200 SERIES GAUGE IS 0.3 MM PRESS FIT, UNLESS OTHERWISE SPECIFIED.

* A steel, stainless or chrome cover ring must be additionally ordered when lenses other than Plexiglass™ are utilized on all 200 Series models

Consult factory for additional non-stock and special accessory availability.

300 SERIES BRASS CASE LIQUID FILLED GAUGE ACCESSORIES†

• = Option/accessory is available

MODEL NO.	25-300	25-310	40-300	40-310
CONNECTION				
Chrome Front Flange (CFF)	•	•	•	•
Chrome Front Flange (CFF) w/o Holes	•	•	•	•
Brass Front Flange (BFF)	•	•	•	•
Black Front Flange (BLFF)			•	•
304SS Rear Flange (SSRF)			•	•
Brass Rear Flange (BRF)	•	•		
Chrome Cover Ring (CCR)	•	•	•	
Chrome Bezel w/U Clamp (CB U)		•		•
Maximum Indicating Pointer (MIP)	•	•		
Lexan Lens (LL)			•	•
Glass Lens Overlay (GLO)	•	•		
Safety Glass Overlay (SGO)	•	•	•	•
Adapter Ring (AR)		•		•
7/16″ 20 Straight Thread*	•	•	•	•
Laser Marking (LM)	•	•	•	•
Stainless Steel Tagging (ST)	•	•	•	•
Orifice Brass Threaded 0.3mm (BT3)	•	•	•	•
Orifice Brass Threaded 0.4mm (BT4)	•	•	•	•
Orifice Brass Threaded 0.8mm (BT8)	•	•	•	•

STANDARD ORIFICE FOR 300 SERIES GAUGE IS 0.8 MM THREADED, UNLESS OTHERWISE SPECIFIED.

† See 300 Series Gauge Prices for any minimum quantities that may apply when ordering these accessories.

* Includes Viton® O Ring. Consult factory for availability. Viton® is a registered trademark of DuPont Dow Elastomers.

Consult factory for additional non-stock and special accessory availability.

Options & Accessories by Gauge Series

400/500 SERIES ALL STAINLESS STEEL PRESSURE GAUGES DRY, LIQUID & AMMONIA GAUGE ACCESSORIES

• = Option/accessory is available
C = Consult factory for availability
STD = Standard stock model specification

MODEL NO.	15-401	15-411	25-400 / 25-500	25-410 / 25-510	40-400 / 40-500	40-410 / 40-510	60-400 / 60-500	60-410 / 60-510	25-406 / 25-506
CONNECTION									
304 SS Front Flange (SSFF)				•	•	•	•	•	
304 SS Rear Flange (SSRF)			C	C	•	•	•	•	C
SS Bezel w/U-Clamp (SSB-U)						•		•	
Installed 304SS Panel Mount Clamp (SPMC)				•					
Uninstalled 304SS Panel Mount Clamp (25-459-1-55-PMC)				•					
Installed Steel Panel Mount Clamp (PMC)				•					
Uninstalled Steel Panel Mount Clamp (25-459-1-PMC)				•					
Flange Ring (FR)				•					
Flange Ring 304SS (SSFR)				•					
Adjustable Pointer (AP)					•	•	STD	STD	
Safety Glass Lens (SGL)			•	•	•	•	•	•	•
Maximum Indicating Pointer (MIP)			•	•	•	•	•	•	•
Red Set Pointer (SP)			•	•	•	•	•	•	•
Laser Marking (LM)	•	•	•	•	•	•	•	•	•
Stainless Steel Tagging (ST)	•	•	•	•	•	•	•	•	•
Orifice - 316SS Threaded Orifice - 0.8mm (ST8)	•	•	•	•	•	•	•	•	•
Orifice - 316SS Threaded Orifice - 0.5mm (ST5)	•	•	•	•	•	•	•	•	•

STANDARD ORIFICE FOR 400/500 SERIES GAUGE IS 0.8 MM THREADED, UNLESS OTHERWISE SPECIFIED.
Consult factory for additional non-stock and special accessory availability.

600/700 SERIES PROCESS GAUGE ACCESSORIES

• = Option/accessory is available

MODEL NO.	DRY 45-640	DRY 45-740	LIQUID FILLED 45-660	LIQUID FILLED 45-760
CONNECTION				
Safety Glass Lens (SGL)	•	•	•	•
Glass Lens (GL)	•	•	•	•
Maximum Indicating Pointer (MIP)	•	•	•	•
Uninstalled Black Panel Mount Ring (BPMR)	•	•	•	•
Uninstalled Chrome Panel Mount Ring (CPMR)	•	•	•	•
Manocont "Dampened" Movement (MDM)	•	•		
Overload Stop (OS)	•	•	•	•
Laser Marking (LM)	•	•	•	•
Stainless Steel Tagging (ST)	•	•	•	•
Orifice - Brass Press Fit - 0.3mm (BP3)	•		•	
Orifice - Brass Threaded - 0.8mm (BT8)	•		•	
Orifice - 316SS Threaded - 0.8mm (ST8)		•		•

STANDARD ORIFICE FOR 600/700 SERIES GAUGE IS 0.8 MM THREADED, UNLESS OTHERWISE SPECIFIED.
Consult factory for additional non-stock and special accessory availability.

800 SERIES PRECISION TEST GAUGE ACCESSORIES

• = Option/accessory is available

MODEL NO.	60-800
CONNECTION	
304 SS Front Flange (SSFF)	•
304 SS Rear Flange (SSRF)	•
Carrying Case (CC)	•
Laser Marking (LM)	•
Stainless Steel Tagging (ST)	•
Orifice - Brass Press Fit - 0.3mm (below 10,000 psi) (BP3)	•
Orifice - Brass Threaded - 0.8mm (below 10,000 psi) (BT8)	•
Orifice - 316SS Threaded - 0.8mm (10,000 - 20,000 psi) (ST8)	•

STANDARD ORIFICE FOR 600/700 SERIES GAUGE IS 0.8 MM THREADED, UNLESS OTHERWISE SPECIFIED.

Consult factory for additional non-stock and special accessory availability.

900 SERIES - LIQUID FILLED PRESSURE GAUGE ACCESSORIES

• = Option/accessory is available
C = Consult factory for availability
STD = Standard stock model specification

MODEL NO.	15-910	25-900	25-910	25-901	25-911	40-901	40-911
CONNECTION							
Chrome Flange Ring (CFR)			•		•		
304 SS Polished Flange Ring (SSFR)			•		•		
Installed 304SS Panel Mount Clamp (SPMC)					•		
Uninstalled 304SS Panel Mount Clamp (25-459-1-55-SPMC)					•		
Installed Steel Panel Mount Clamp (PMC)			•		•		
Uninstalled Steel Panel Mount Clamp (25-459-1-PMC)			•		•		
SS Bezel w/U-Clamp (SSB-U)							•
SS Bezel (SSB)							
Adjustable Pointer (AP)						•	•
Safety Glass Lens (SGL)				•	•	•	•
Black Front Flange (BLFF)			C				
Chrome Front Flange (CFF)							
304 SS Front Flange (SSFF)					•	•	•
304 SS Rear Flange (SSRF)						•	•
Black Cover Ring (BCR)							
Chrome Cover Ring (CCR)							
304 SS Cover Ring (SSCR)						STD	STD
Maximum Indicating Pointer (MIP)				•**	•**	•	•
7/16″ - 20 Straight Thread*		•	•	•	•	•	•
Laser Marking (LM)	•	•	•	•	•	•	•
Stainless Steel Tagging (ST)	•	•	•	•	•	•	•
Orifice - Brass Press Fit - 0.3mm (BP3)	•	•	•	•	•	•	•
Orifice - Brass Threaded - 0.5mm (BT5)	•	•	•	•	•		
Orifice - Brass Threaded - 0.8mm BT8)						•	•

STANDARD ORIFICE FOR 900 SERIES GAUGE IS 0.3 MM PRESS FIT, UNLESS OTHERWISE SPECIFIED.

* Includes Viton® O-Ring. Consult factory for availability. Viton® is a registered trademark of DuPont Dow Elastomers.

** For ranges 60 psi and above. Minimum quanitities may apply when ordering this accessory for a non-stocked pressure range. Consult factory.

Consult factory for additional non-stock and special accessory availability.

Options & Accessories

Panel Mounting/Flanges

Panel Mount Clamp
20 110 PMC

- Many panel mounting options are available and can be installed in the field
- Options include:
  - Brass Front Flanges (BFF)
  - Black Painted Steel Front Flanges (BLFF)
  - Chrome Front Flanges (CFF)
  - Stainless Steel Front Flanges (SSFF)
  - Chrome Triangular Bezel with U-Clamp (CB-U)
  - Black Painted Steel Triangular Bezels with U-Clamp (BB-U-Clamp)
  - Stainless Steel Narrow Bezel Front Flanges (SSB-U)
  - Panel Mount Clamps (PMC)
- Chrome plated steel Adapter Rings (AR) are available in conjunction with several of these flanges to adapt to oversized panel cut outs, including:
  - Stainless Steel Flange Rings (SSFR)
  - Chrome Plated Steel Flange Rings (CFR)
  - Black or Chrome Panel Mount Rings (BPMR & CPMR)
- Rear Flanges (RF) for front of panel mounting are also available as a factory installed option on some models
- **See the Gauges Accessories & Options Chart for availability on specific models**

Chrome Triangular Bezel
with U Clamp

Cases and Cover Rings

Cases and Cover Rings

- The following cases and cover rings are available on many models as production options:
  - Black painted steel (BCR)
  - Chrome plated steel (CCR)
  - 304 Stainless steel (SSCR)
- **See the Gauges Accessories & Options Chart for availability on specific models**

Lenses

- A variety of lens options are available on many models as a production option:
  - Instrument Glass Lenses
  - Laminated Safety Glass Lenses
  - Plexiglass™ Lenses
  - Homalite Lenses (resistant to many industrial solvents)
- A steel or stainless case and cover ring is required when other than Plexiglass™ lenses are utilized
- Some models are also available with a solid front, safety case
- **See the Gauges Accessories & Options Chart for availability on specific models**

Maximum Indicating Pointers (MIP)

Maximum Indicating Pointer

- An invaluable tool for identifying pressure spikes in a system
- Extremely helpful during system start up and troubleshooting
- MIPs add an additional ±1% error to the gauge because of the increased load on the bourdon tube
- On ranges of 60 psi and lower, MIPs may double the allowed error of the gauge

Set Pointers (SP)

- Used to identify an operating minimum or maximum pressure or vacuum value
- Set pointers are available on all models

Set Pointers

Rubber Case Protectors (RCP)

- Ideal for gauges that are subjected to direct physical shock
- 2-1/2 inch covers are blue and 4 inch covers are black

Rubber Case Protectors

Orifices

- Press-fit brass Orifices or threaded 316 Stainless Steel Orifices are available on all NOSHOK Pressure Gauges
- They are standard with .012 I.D or .032 I.D, depending on the model
- Orifices are used in a gauge to restrict the flow of rapidly increasing and decreasing pressures, reducing the immediate effect of pulsations and pressure spikes
- Orifices are recommended for all dynamic applications

Recalibrators

- The option of an adjustment screw accessible through the dial facilitates re-setting the zero point without disassembling the gauge

Overpressure Protection

- Over pressure protection of up to 200% of the dial range is available on some models as a production option

Ammonia Refrigeration Gauges

- Ammonia Refrigeration Gauges with dials reading in both pressure and temperature are available in 400/500 Series 2-1/2 and 4 inch sizes

Ammonia Gauges

Liquid Filling Options

- Many NOSHOK gauges are available with liquid filling options
- Standard fill is Glycerine
- Optional fill liquids include Dow Corning 200® Silicone and Halocarbon, and a list of more...

Special Connections

- Available on most NOSHOK gauges
- Some examples include:
  - Metric threads
  - Female threads
  - Straight threads (flare or swivel type)
  - Special o-ring connections
- Please contact us with your requirements for prices, availability and minimum quantities

Reid Vapor Test Gauges

- Configuration includes a handle, special dial and special pressure port
- Available in 600/700 Series Gauges with pressure ranges of 0-5 psi, 0-15 psi and 0-30 psi

Options & Accessories

Receiver Gauges

- 3-15 psi Receiver Gauges are available in both 600 Series (Brass) and 700 Series (316 Stainless steel)

Metric Dials And Customized Special Dials

- Dual scale Metric Dials in psi/bar, psi/kPa and psi/kg/cm2 are available on many models
- Certain other scales are available for specific sizes and ranges, such as single scale bar and kPa, refrigerant scales and altitude scales
- Please consult the factory for availability
- Customized Special Dials such as non-standard metric scale, tons of ram, lbs. of force, etc. are available in small quantities (as few as one piece) on some models

Metric Dials and Customized Special Dials

Certified Calibration

- Available on all NOSHOK Gauges
- Certified Calibration provides the user with a serial numbered gauge along with a calibration sheet against a primary pressure standard
- Traceable to the National Institute of Standards and Technology

Piston Type Snubbers

- Resist clogging and are self cleaning
- Five different sized pistons included with each snubber to ensure the correct amount of snubbing for virutally every application
- Available in brass and 316 Stainless steel in 1/4 NPT, 1/2 NPT or 7/16-20 SAE-4

Piston Type Snubbers

Options & Accessories

Piston Type Snubbers Specifications

MODEL NO.	SIZE	MATERIAL	PRESSURE RATING
1325	1/4″ NPT	Brass	6000 psi
1335	7/16 20 SAE 4	Brass	6000 psi
1350	1/2″ NPT	Brass	6000 psi
5025	1/4″ NPT	316 Stainless Steel	15000 psi
5050	1/2″ NPT	316 Stainless Steel	15000 psi

DIMENSIONS		1/4 NPT	1/2 NPT	7/16-20 SAE-4
A	IN	0.812	1.125	0.812
	MM	20.6	28.6	20.6
B	IN	1.60	1.875	1.60
	MM	40.6	47.6	40.6
C	IN	1.04	1.25	1.24
	MM	26.4	31.8	31.5
D	IN	.56	0.625	0.36
	MM	14.2	15.9	9.1

PISTON	SUGGESTED USE
A, B*	Gases
B, C	Water
C, D	Light Oil
E	Heavy Oil

* Snubber assembled and shipped with the B piston installed.

Sintered Snubbers

- Cost effective solution to protect expensive instrumentation
- Increases gauge readability by smoothing out pressure surges, pulsations and spikes
- Eliminates instrument failure due to pressure shock
- 5 basic elements available for each snubber to accommodate specific application needs
- Snubbing action achieved by utilizing a corrosion resistant 316 Stainless Steel sintered porous element
- Exotic materials or intermediate disc grades available on a per order basis
- Provides long service life with no moving parts to wear out

Sintered Snubbers

Options & Accessories

Sintered Snubbers Specifications

MODEL NO.	SIZE	MATERIAL	PRESSURE RATING
1125 X	1/4″ NPT	Brass	6000 psi
1135 X	7/16 20 SAE 4	Brass	6000 psi
1150 X	1/2″ NPT	Brass	6000 psi
5125 X	1/4″ NPT	316 Stainless Steel	15000 psi
5150 X	1/2″ NPT	316 Stainless Steel	15000 psi

NOTE: The "X" in the Model Number denotes the Disc option (example: 1135-C). See chart below for Disc options.


Sintered Snubbers Replacement Discs

DIMENSIONS		1/4 NPT	1/2 NPT	7/16-20 SAE-4
A	IN	0.812	1.125	0.812
	MM	20.6	28.6	20.6
B	IN	1.60	1.875	1.60
	MM	40.6	47.6	40.6
C	IN	1.04	1.25	1.24
	MM	26.4	31.8	31.5
D	IN	.56	0.625	0.36
	MM	14.2	15.9	9.1

Sintered Snubbers Replacement Disc Options

DISC OPTION	MODEL NO.	AVERAGE AIR FLOW ESTIMATE	SUGGESTED USE
A	PD8 A SS1	0.25 L/MIN @ 1 psi	Gases
B	PD8 B SS1	0.63 L/MIN @ 1 psi	Gases, Water
C	PD8 C SS1	1.46 L/MIN @ 1 psi	Water, Light Oil
D	PD8 D SS1	2.79 L/MIN @ 1 psi	Light Oil
E	PD8 E SS1	3.14 L/MIN @ 1 psi	Heavy Oil

Pigtail Steam Syphons

Pigtail Steam Syphons

- Protect the instrument from the damaging effects of high temperature steam
- Recommended for use in all steam applications
- Available in 1/4 and 1/2 NPT sizes in welded steel, welded 316 Stainless steel or seamless 316 Stainless steel with ratings to 3,800 psi @ 850º F

Pigtail Steam Syphons

Product Specifications

MODEL NO.	COIL STYLE	SIZE	MATERIAL
1225	90°	1/4″ NPT	Welded Steel, Schedule 40
1250		1/2″ NPT	Welded Steel, Schedule 80
2225		1/4″ NPT	Welded 316SS, Schedule 40
2250		1/2″ NPT	Welded 316SS, Schedule 80
1025	180°	1/4″ NPT	Welded Steel, Schedule 40
1050		1/2″ NPT	Welded Steel, Schedule 80
2025		1/4″ NPT	Welded 316SS, Schedule 40
2050		1/2″ NPT	Welded 316SS, Schedule 80
1425	270°	1/4″ NPT	Welded Steel, Schedule 40
1450		1/2″ NPT	Welded Steel, Schedule 80
2325		1/4″ NPT	Welded 316SS, Schedule 40
2350		1/2″ NPT	Welded 316SS, Schedule 80
1525	360°	1/4″ NPT	Welded Steel, Schedule 40
1550		1/2″ NPT	Welded Steel, Schedule 80
2525		1/4″ NPT	Welded 316SS, Schedule 40
2550		1/2″ NPT	Welded 316SS, Schedule 80

1/4" NPT Steam Syphons Temperature vs. Pressure

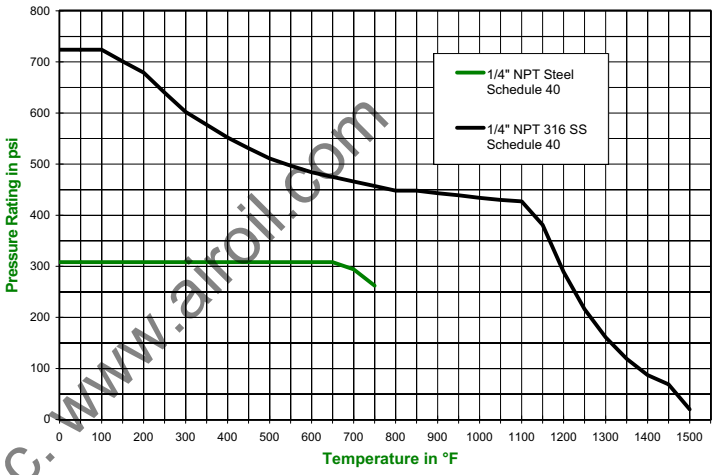

90° Syphon

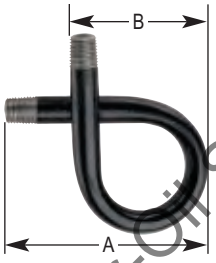

180° Syphon

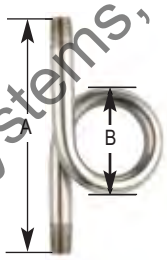

270° Syphon

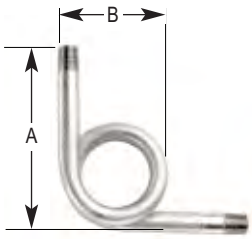

360° Syphon

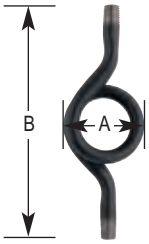

CONNECTION SIZE			1/4 NPT	1/2 NPT
90°	A	IN	4.25	6.5
		MM	107.95	165.1
	B	IN	2.625	4.0
		MM	66.675	101.6
180°	A	IN	5.5	8.875
		MM	139.7	225.425
	B	IN	2.5	4.0
		MM	63.5	101.6
270°	A	IN	4.5	7.5
		MM	114.3	190.5
	B	IN	2.625	4.0
		MM	66.675	101.6
360°	A	IN	7.25	12.0
		MM	184.15	304.8
	B	IN	2.625	4.125
		MM	66.675	104.775

1/2" NPT Steam Syphons Temperature vs. Pressure

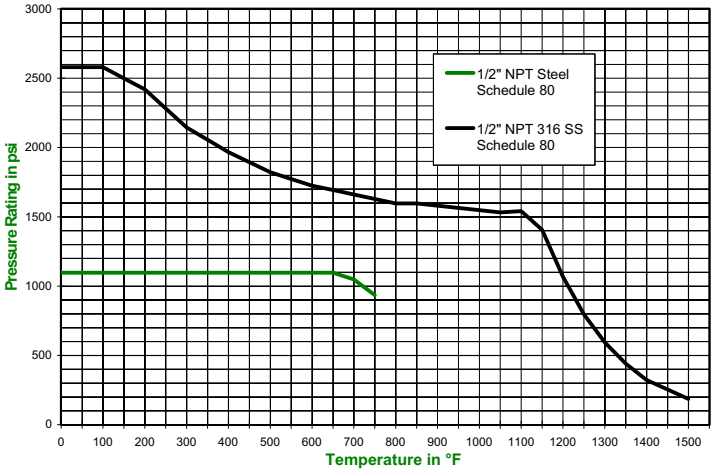

Swivel Adapter

- Temperature ratings: 15,000 psi @ 200° F and 3,000 psi @ 1,000° F
- Used with gauges and gauge valves to adjust the line of sight
- Rotates 360° to allow the connected instrument to be positioned in the desired direction
- The pressure connection is achieved with a tapered cone style compression fitting simply by tightening the swivel hex nut
- All 316 Stainless steel construction
- Standard with 1/2 NPT male process – 1/2 NPT female instrument connections
- Also available with 1/4 NPT connections

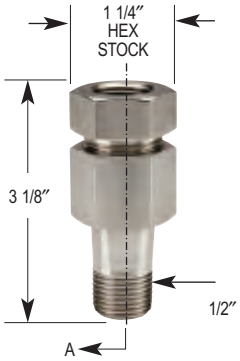

Magnetic Spring Contact Switch (MSCS)

- An excellent choice when an accurate pressure switch is required in addition to a reliable pressure gauge
- Fully adjustable by the user
- These switches are actuated by the pressure gauge pointer to provide accurate field adjustment
- A removable adjustment key makes them tamper-proof
- They operate with an extremely broad power supply, AC or DC up to 250V max. (30W/50 VA), allowing them to be used virtually anywhere in the world in addition to very remote applications with only DC battery pack power available
- Standard units consist of (2) two magnetic spring switches; either one or both switches may be used:
  - Switch (1) one is normally closed
  - Switch (2) two is normally open with operation referenced on rising (or increasing) pressure
- Magnetic Spring Contact Switches are available as a factory installed option on models 40-105, 40-115, 40-400 and 40-410
- The lowest full scale pressure range this switch may be used on is 0 psi to 60 psi because of the increased load on the pointer and bourdon tube
- A matching 4-pin connector with 5 feet of 4-wire and color coded shielded cable is standard

Magnetic Spring Contact Switch

SPECIFICATIONS

Type of Power	A.C. or D.C. 24 to 250V max
Maximum Amps	1.0 A
Maximum Switching Capacity	30W/50 VA
Gauge Accuracy	Add an additional ±2%
Minimum Magnet Holding Force	1g
Contact Pin Material	Silver Tungsten
Ambient Temperature Limitation	0°F to 140°F (18°C to 61°C)
Minimum Full Scale Pressure Range	0 60 psi

APPLICATIONS

- Air compressors
- Gas compressors
- Hydraulic and pneumatic circuitry
- Die-cast machinery
- Plastic injection molding machinery
- Anywhere accurate off/on switching capabilities based on pressure are required

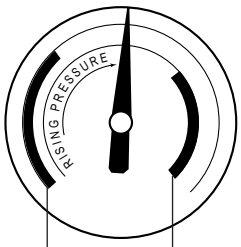

CONTACT NO. 1
Normally Closed, Opens on Rising Pressure

CONTACT NO. 2
Normally Open, Closes on Rising Pressure

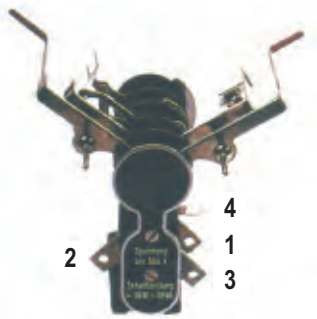

WIRING AND TERMINAL LOCATION

1. Contact Switch No. 1; Red or Black
2. Contact Switch No. 2; Blue
3. Power; Green or Brown
4. Ground; Yellow/Green Stripe

Accuracy/Standard Dial Configuration

Applies to:

300 Series Gauges: 4 inch
400/500 Series Gauges: 4 and 6 inch
700 Series Gauges (LP): 4-1/2 inch
900 Series Gauges: 4 inch

ACCURACY: ±1.0% Full Scale ASME Grade 1A											
Primary Scale				Secondary Scales							
Dial Range	Figure	Graduation	kPa	Figure	Graduation		Figure	Graduation	bar	Figure	Graduation
-30 inHg to 0 psi	-5 inHg	-0.5 inHg	**-100 kPa to 0 kPa**	-20 kPa	-2 kPa	**-1 kg/cm2 to 0 kg/cm2**	-0.2 kg/cm2	-0.02 kg/cm2	**-1 bar to 0 bar**	-0.2 bar	-0.02 bar
-30 inHg to 15 psi	-10 inHg 5 psi	-1 inHg 0.5 psi	**-100 kPa to 100 kPa**	-50 kPa 50 kPa	-5 kPa 2 kPa	**-1 kg/cm2 to 1.05 kg/cm2**	-0.5 kg/cm2 0.5 kg/cm2	-0.05 kg/cm2 0.05 kg/cm2	**-1 bar to 1 bar**	-0.5 bar 0.5 bar	-0.05 bar 0.05 bar
-30 inHg to 30 psi	-10 inHg 5 psi	-1 inHg 0.2 psi	**-100 kPa to 205 kPa**	-50 kPa 50 kPa	-5 kPa 5 kPa	**-1 kg/cm2 to 2.10 kg/cm2**	-1 kg/cm2 0.5 kg/cm2	-0.1 kg/cm2 0.01 kg/cm2	**-1 bar to 2.05 bar**	-0.5 bar 0.5 bar	-0.05 bar 0.05 bar
-30 inHg to 60 psi	-30 inHg 10 psi	-2 inHg 1 psi	**-100 kPa to 410 kPa**	-100 kPa 100 kPa	-10 kPa 10 kPa	**-1 kg/cm2 to 4.2 kg/cm2**	-1 kg/cm2 1 kg/cm2	-0.1 kg/cm2 01 kg/cm2	**-1 bar to 4 bar**	-1 bar 1 bar	-1 bar .01 bar
-30 inHg to 100 psi	-30 inHg 20 psi	-5 inHg 2 psi	**-100 kPa to 680 kPa**	-100 kPa 200 kPa	-20 kPa 20 kPa	**-1 kg/cm2 to 7 kg/cm2**	-1 kg/cm2 2 kg/cm2	-0.2 kg/cm2 0.2 kg/cm2	**-1 bar to 6.8 bar**	-1 bar 2 bar	-0.2 bar 0.2 bar
-30 inHg to 160 psi	-30 inHg 20 psi	-10 inHg 2 psi	**-100 kPa to 1100 kPa**	-100 kPa 200 kPa	-20 kPa 20 kPa	**-1 kg/cm2 to 11.2 kg/cm2**	-1 kg/cm2 2 kg/cm2	-0.2 kg/cm2 0.2 kg/cm2	**-1 bar to 11 bar**	-1 bar 2 bar	-0.2 bar 0.2 bar
-30 inHg to 200 psi	-30 inHg 40 psi	-5 inHg 4 psi	**-100 kPa to 1360 kPa**	-100 kPa 400 kPa	-20 kPa 40 kPa	**-1 kg/cm2 to 14 kg/cm2**	-1 kg/cm2 4 kg/cm2	-0.2 kg/cm2 0.4 kg/cm2	**-1 bar to 13.6 bar**	-1 bar 4 bar	-0.2 bar 0.4 bar
-30 inHg to 300 psi	-30 inHg 50 psi	-10 inHg 5 psi	**-100 kPa to 2050 kPa**	-100 kPa 500 kPa	-50 kPa 50 kPa	**-1 kg/cm2 to 21 kg/cm2**	-1 kg/cm2 5 kg/cm2	-0.5 kg/cm2 0.5 kg/cm2	**-1 bar to 20.5 bar**	-1 bar 5 bar	-0.5 bar 0.5 bar
0 psi to 15 psi	3 psi	0.2 psi	**0 kPa to 100 kPa**	30 kPa	2 kPa	**0 kg/cm2 to 1.05 kg/cm2**	0.3 kg/cm2	0.05 kg/cm2	**0 bar to 1.00 bar**	0.3 bar	0.02 bar
0 psi to 30 psi	5 psi	0.5 psi	**0 kPa to 205 kPa**	50 kPa	5 kPa	**0 kg/cm2 to 2.1 kg/cm2**	0.5 kg/cm2	0.1 kg/cm2	**0 bar to 2.05 bar**	0.5 bar	0.05 bar
0 psi to 60 psi	10 psi	1 psi	**0 kPa to 410 kPa**	100 kPa	10 kPa	**0 kg/cm2 to 4.2 kg/cm2**	1 kg/cm2	0.2 kg/cm2	**0 bar to 4.10 bar**	1 bar	0.01 bar
0 psi to 100 psi	20 psi	2 psi	**0 kPa to 680 kPa**	200 kPa	20 kPa	**0 kg/cm2 to 7 kg/cm2**	2 kg/cm2	0.2 kg/cm2	**0 bar to 6.8 bar**	2 bar	0.2 bar
0 psi to 160 psi	20 psi	2 psi	**0 kPa t0 1100 kPa**	200 kPa	20 kPa	**0 kg/cm2 to 11.0 kg/cm2**	2 kg/cm2	0.4 kg/cm2	**0 bar to 11 bar**	2 bar	0.2 bar
0 psi to 200 psi	40 psi	4 psi	**0 kPa to 1360 kPa**	400 kPa	40 kPa	**0 kg/cm2 to 14 kg/cm2**	4 kg/cm2	0.5 kg/cm2	**0 bar to 13.6 bar**	4 bar	0.4 bar
0 psi to 300 psi	50 psi	5 psi	**0 kPa to 2050 kPa**	500 kPa	50 kPa	**0 kg/cm2 to 21 kg/cm2**	5 kg/cm2	0.5 kg/cm2	**0 bar to 20.5 bar**	5 bar	0.5 bar
0 psi to 400 psi	50 psi	5 psi	**0 kPa to 2700 kPa**	500 kPa	50 kPa	**0 kg/cm2 to 28 kg/cm2**	5 kg/cm2	0.5 kg/cm2	**0 bar to 27.0 bar**	5 bar	0.5 bar
0 psi to 600 psi	100 psi	10 psi	**0 kPa to 4100 kPa**	1000 kPa	100 kPa	**0 kg/cm2 to 42 kg/cm2**	10 kg/cm2	1 kg/cm2	**0 bar to 41.0 bar**	10 bar	1 bar
0 psi to 1000 psi	200 psi	20 psi	**0 kPa to 6800 kPa**	2000 kPa	200 kPa	**0 kg/cm2 to 70 kg/cm2**	20 kg/cm2	2 kg/cm2	**0 bar to 68 bar**	20 bar	2 bar
0 psi to 1500 psi	300 psi	20 psi	**0 kPa to 10000 kPa**	3000 kPa	200 kPa	**0 kg/cm2 to 105 kg/cm2**	30 kg/cm2	2 kg/cm2	**0 bar to 100 bar**	30 bar	2 bar
0 psi to 2000 psi	400 psi	40 psi	**0 kPa to 13600 kPa**	4000 kPa	400 kPa	**0 kg/cm2 to 140 kg/cm2**	40 kg/cm2	4 kg/cm2	**0 bar to 136 bar**	40 bar	4 bar
0 psi to 3000 psi	500 psi	50 psi	**0 kPa to 20500 kPa**	5000 kPa	500 kPa	**0 kg/cm2 to 210 kg/cm2**	50 kg/cm2	5 kg/cm2	**0 bar to 205 bar**	50 bar	5 bar
0 psi to 5000 psi	1000 psi	100 psi	**0 kPa to 34000 kPa**	10000 kPa	1000 kPa	**0 kg/cm2 to 350 kg/cm2**	100 kg/cm2	10 kg/cm2	**0 bar to 340 bar**	100 bar	10 bar
0 psi to 6000 psi	1000 psi	100 psi	**0 kPa to 41000 kPa**	10000 kPa	1000 kPa	**0 kg/cm2 to 420 kg/cm2**	100 kg/cm2	10 kg/cm2	**0 bar to 410 bar**	100 bar	10 bar
0 psi to 7500 psi	1500 psi	100 psi	**0 kPa to 51000 kPa**	10000 kPa	1000 kPa	**0 kg/cm2 to 520 kg/cm2**	100 kg/cm2	10 kg/cm2	**0 bar to 510 bar**	100 bar	10 bar
0 psi to 10000 psi	2000 psi	200 psi	**0 kPa to 68000 kPa**	20000 kPa	2000 kPa	**0 kg/cm2 to 700 kg/cm2**	200 kg/cm2	20 kg/cm2	**0 bar to 680 bar**	200 bar	20 bar
0 psi to 15000 psi	3000 psi	200 psi	**0 kPa to 103000 kPa**	30000 kPa	2000 kPa	**0 kg/cm2 to 1050 kg/cm2**	300 kg/cm2	20 kg/cm2	**0 bar to 1030 bar**	300 bar	20 bar
0 psi to 20000 psi	4000 psi	400 psi	**0 kPa to 136000 kPa**	40000 kPa	4000 kPa	**0 kg/cm2 to 1400 kg/cm2**	400 kg/cm2	40 kg/cm2	**0 bar to 1360 bar**	400 bar	40 bar
0 psi to 30000 psi	5000 psi	500 psi	**0 kPa to 205000 kPa**	50000 kPa	5000 kPa	**0 kg/cm2 to 2100 kg/cm2**	500 kg/cm2	50 kg/cm2	**0 bar to 2050 bar**	500 bar	50 bar
0 psi to 40000 psi	5000 psi	500 psi	**0 kPa to 270000 kPa**	50000 kPa	5000 kPa	**0 kg/cm2 to 2800 kg/cm2**	500 kg/cm2	50 kg/cm2	**0 bar to 2700 bar**	500 bar	50 bar
0 psi to 50000 psi	10000 psi	1000 psi	**0 kPa to 340000 kPa**	100000 kPa	100000 kPa	**0 kg/cm2 to 3500 kg/cm2**	1000 kg/cm2	100 kg/cm2	**0 bar to 3400 bar**	1000 bar	100 bar
0 psi to 60000 psi	10000 psi	1000 psi	**0 kPa to 410000 kPa**	100000 kPa	100000 kPa	**0 kg/cm2 to 4200 kg/cm2**	1000 kg/cm2	100 kg/cm2	**0 bar to 4100 bar**	1000 bar	100 bar
0 psi to 75000 psi	15000 psi	1000 psi	**0 kPa to 510000 kPa**	100000 kPa	100000 kPa	**0 kg/cm2 to 5200 kg/cm2**	1000 kg/cm2	100 kg/cm2	**0 bar to 5100 bar**	1000 bar	100 bar
0 psi to 100000 psi	20000 psi	2000 psi	**0 kPa to 680000 kPa**	200000 kPa	200000 kPa	**0 kg/cm2 to 7000 kg/cm2**	2000 kg/cm2	200 kg/cm2	**0 bar to 6800 bar**	2000 bar	100 bar

Accuracy/Standard Dial Configuration

Applies to:

100 Series Gauges: 4 inch 100 Series
200 Series Gauges: 2-1/2 inch
300 Series Gauges: 2-1/2 inch
400/500 Series Gauges: 2-1/2 inch
900 Series Gauges: 2-1/2 inch

ACCURACY: ±1.5% Full Scale ASME Grade 2A											
Primary Scale				Secondary Scales							
Dial Range	Figure	Graduation	kPa	Figure	Graduation	kg/cm2	Figure	Graduation	bar	Figure	Graduation
-30 inHg to 0 psi	5 inHg	0.5inHg	**-100 kPa to 0 kPa**	20 kPa	2 kPa	1 kg/cm2 to 0 kg/cm2	0.2 kg/cm2	0.02 kg/cm2	**-1 bar to 0 bar**	0.2 bar	0.02 bar
-30 inHg to 15 psi	10 inHg 5 psi	1 inHg 0.5 psi	**-100 kPa to 100 kPa**	50 kPa 50 kPa	5 kPa 2 kPa	1 kg/cm2 to 1.05 kg/cm2	0.5 kg/cm2 0.5 kg/cm2	0.05 kg/cm2 0.05 kg/cm2	**-1 bar to 1 bar**	0.5 bar 0.5 bar	0.05 bar 0.05 bar
-30 inHg to 30 psi	30 inHg 10 psi	2 inHg 1 psi	**-100 kPa to 205 kPa**	100 kPa 100 kPa	10 kPa 10 kPa	1 kg/cm2 to 2.10 kg/cm2	1 kg/cm2 1 kg/cm2	0.1 kg/cm2 0.1 kg/cm2	**-1 bar to 2.05 bar**	1 bar 1 bar	0.1 bar 0.1 bar
-30 inHg to 60 psi	30 inHg 20 psi	5 inHg 2 psi	**-100 kPa to 410 kPa**	100 kPa 200 kPa	20 kPa 20 kPa	1 kg/cm2 to 4.2 kg/cm2	1 kg/cm2 2 kg/cm2	2 kg/cm2 0.2 kg/cm2	**-1 bar to 4 bar**	1 bar 2 bar	0.2 bar 0.2 bar
-30 inHg to 100 psi	30 inHg 20 psi	5 inHg 2 psi	**-100 kPa to 680 kPa**	100 kPa 200 kPa	20 kPa 20 kPa	1 kg/cm2 to 7 kg/cm2	1 kg/cm2 2 kg/cm2	0.2 kg/cm2 0.2 kg/cm2	**-1 bar to 6.8 bar**	1 bar 2 bar	0.2 bar 0.2 bar
-30 inHg to 160 psi	30 inHg 40 psi	10 inHg 4 psi	**-100 kPa to 1100 kPa**	100 kPa 400 kPa	50 kPa 40 kPa	1 kg/cm2 to 11.2 kg/cm2	1 kg/cm2 4 kg/cm2	0.5 kg/cm2 0.4kg/cm2	**-1 bar to 11 bar**	1 bar 4 bar	0.5 bar 0.4 bar
-30 inHg to 200 psi	30 inHg 40 psi	10 inHg 4 psi	**-100 kPa to 1360 kPa**	100 kPa 400 kPa	50 kPa 40 kPa	1 kg/cm2 to 14 kg/cm2	1 kg/cm2 4 kg/cm2	0.5 kg/cm2 0.4 kg/cm2	**-1 bar to 13.6 bar**	1 bar 4 bar	0.5 bar 0.4 bar
-30 inHg to 300 psi	30 inHg 50 psi	10 inHg 5 psi	**-100 kPa to 2050 kPa**	100 kPa 500 kPa	50 kPa 50 kPa	1 kg/cm2 to 21 kg/cm2	1 kg/cm2 5 kg/cm2	0.5 kg/cm2 0.5 kg/cm2	**-1 bar to 20.5 bar**	1 bar 5 bar	0.5 bar 0.5 bar
0 psi to 15 psi	3 psi	0.2 psi	**0 kPa to 100 kPa**	30 kPa	2 kPa	0 kg/cm2 to 1.05 kg/cm2	0.3 kg/cm2	0.02 kg/cm2	**0 bar to 1.00 bar**	0.3 bar	0.02 bar
0 psi to 30 psi	5 psi	0.5 psi	**0 kPa to 205 kPa**	50 kPa	5 kPa	0 kg/cm2 to 2.1 kg/cm2	0.5 kg/cm2	0.05 kg/cm2	**0 bar to 2.05 bar**	0.5 bar	0.05 bar
0 psi to 60 psi	10 psi	1 psi	**0 kPa to 410 kPa**	100 kPa	10 kPa	0 kg/cm2 to 4.2 kg/cm2	1 kg/cm2	0.01 kg/cm2	**0 bar to 4.10 bar**	1 bar	0.1 bar
0 psi to 100 psi	20 psi	2psi	**0 kPa to 680 kPa**	200 kPa	20 kPa	0 kg/cm2 to 7 kg/cm2	2 kg/cm2	0.2 kg/cm2	**0 bar to 6.8 bar**	2 bar	0.2bar
0 psi to 160 psi	40 psi	4 psi	**0 kPa t0 1100 kPa**	400 kPa	40 kPa	0 kg/cm2 to 11.0 kg/cm2	4 kg/cm2	0.4kg/cm2	**0 bar to 11 bar**	4 bar	0.4 bar
0 psi to 200 psi	40 psi	4 psi	**0 kPa to 1360 kPa**	400 kPa	40 kPa	0 kg/cm2 to 14 kg/cm2	4 kg/cm2	0.4 kg/cm2	**0 bar to 13.6 bar**	4 bar	0.4 bar
0 psi to 300 psi	50 psi	5 psi	**0 kPa to 2050 kPa**	500 kPa	50 kPa	0 kg/cm2 to 21 kg/cm2	5 kg/cm2	0.5 kg/cm2	**0 bar to 20.5 bar**	5 bar	0.5 bar
0 psi to 400 psi	100 psi	10 psi	**0 kPa to 2700 kPa**	1000 kPa	100 kPa	0 kg/cm2 to 28 kg/cm2	2 kg/cm2	0.5 kg/cm2	**0 bar to 27.0 bar**	2 bar	0.5 bar
0 psi to 600 psi	100 psi	10 psi	**0 kPa to 4100 kPa**	1000 kPa	100 kPa	0 kg/cm2 to 42 kg/cm2	10 kg/cm2	1 kg/cm2	**0 bar to 41.0 bar**	10 bar	1 bar
0 psi to 1000 psi	200 psi	20 psi	**0 kPa to 6800 kPa**	2000 kPa	200 kPa	0 kg/cm2 to 70 kg/cm2	20 kg/cm2	2 kg/cm2	**0 bar to 68 bar**	20 bar	2 bar
0 psi to 1500 psi	300 psi	20 psi	**0 kPa to 10000 kPa**	3000 kPa	200 kPa	0 kg/cm2 to 105 kg/cm2	30 kg/cm2	2 kg/cm2	**0 bar to 100 bar**	30 bar	2 bar
0 psi to 2000 psi	400 psi	40 psi	**0 kPa to 13600 kPa**	4000 kPa	400 kPa	0 kg/cm2 to 140 kg/cm2	40 kg/cm2	4 kg/cm2	**0 bar to 136 bar**	40 bar	4 bar
0 psi to 3000 psi	500 psi	50 psi	**0 kPa to 20500 kPa**	5000 kPa	500 kPa	0 kg/cm2 to 210 kg/cm2	50 kg/cm2	5 kg/cm2	**0 bar to 205 bar**	50 bar	5 bar
0 psi to 5000 psi	1000 psi	100 psi	**0 kPa to 34000 kPa**	10000 kPa	1000 kPa	0 kg/cm2 to 350 kg/cm2	100 kg/cm2	10 kg/cm2	**0 bar to 340 bar**	100 bar	10 bar
0 psi to 6000 psi	1000 psi	100 psi	**0 kPa to 41000 kPa**	10000 kPa	1000 kPa	0 kg/cm2 to 420 kg/cm2	100 kg/cm2	10 kg/cm2	**0 bar to 410 bar**	100 bar	10 bar
0 psi to 7500 psi	1500 psi	100 psi	**0 kPa to 51000 kPa**	10000 kPa	1000 kPa	0 kg/cm2 to 520 kg/cm2	100 kg/cm2	10 kg/cm2	**0 bar to 510 bar**	100 bar	10 bar
0 psi to 10000 psi	2000 psi	200 psi	**0 kPa to 68000 kPa**	20000 kPa	2000 kPa	0 kg/cm2 to 700 kg/cm2	200 kg/cm2	20 kg/cm2	**0 bar to 680 bar**	200 bar	20 bar
0 psi to 15000 psi	3000 psi	200 psi	**0 kPa to 102000 kPa**	30000 kPa	2000 kPa	0 kg/cm2 to 1040 kg/cm2	300 kg/cm2	20 kg/cm2	**0 bar to 1020 bar**	300 bar	20 bar

Accuracy/Standard Dial Configuration

Applies to:

-600/700 Series Gauges: 4-1/2 inch

ACCURACY: ±0.5% Full Scale ASME Grade 2A											
Primary Scale				Secondary Scales							
Dial Range	Figure	Graduation	kPa	Figure	Graduation	kg/cm2	Figure	Graduation	bar	Figure	Graduation
-30 inHg to 0 psi	5 inHg	0.2 inHg	-100 kPa to 0 kPa	20 kPa	1 kPa	-1 kg/cm2 to 0 kg/cm2	0.2 kg/cm2	0.01 kg/cm2	-1 bar to 0 bar	0.2 bar	0.01 bar
-30 inHg to 15 psi	5 inHg 3 psi	0.5 inHg 0.2 psi	-100 kPa to 100 kPa	20 kPa 20 kPa	2 kPa 2 kPa	-1 kg/cm2 to 1.05 kg/cm2	0.2 kg/cm2 0.2 kg/cm2	0.02 kg/cm2 0.02 kg/cm2	-1 bar to 1 bar	0.2 bar 0.2 bar	0.02 bar 0.02 bar
-30 inHg to 30 psi	10 inHg 5 psi	1 inHg 0.5 psi	-100 kPa to 205 kPa	50 kPa 50 kPa	5 kPa 5 kPa	-1 kg/cm2 to 2.10 kg/cm2	1 kg/cm2 0.5 kg/cm2	0.1 kg/cm2 0.05 kg/cm2	-1 bar to 2.05 bar	0.5 bar 0.5 bar	0.05 bar 0.05 bar
-30 inHg to 60 psi	10 inHg 10 psi	1 inHg 0.4 psi	-100 kPa to 410 kPa	50 kPa 100 kPa	1 kPa 4 kPa	-1 kg/cm2 to 4.2 kg/cm2	0.5 kg/cm2 1 kg/cm2	1 kg/cm2 0.04 kg/cm2	-1 bar to 4 bar	0.5 bar 1 bar	1 bar 0.04 bar
-30 inHg to 100 psi	30 inHg 10 psi	2 inHg 1 psi	-100 kPa to 680 kPa	100 kPa 100 kPa	10 kPa 10 kPa	-1 kg/cm2 to 7 kg/cm2	1 kg/cm2 1 kg/cm2	0.1 kg/cm2 0.1 kg/cm2	-1 bar to 6.8 bar	1 bar 1 bar	0.1 bar 0.1 bar
-30 inHg to 160 psi	30 inHg 20 psi	5 inHg 2 psi	-100 kPa to 1100 kPa	100 kPa 200 kPa	20 kPa 20 kPa	-1 kg/cm2 to 11.2 kg/cm2	1 kg/cm2 2 kg/cm2	0.2 kg/cm2 0.2 kg/cm2	-1 bar to 11 bar	1 bar 2 bar	0.2 bar 0.2 bar
-30 inHg to 200 psi	30 inHg 20 psi	5 inHg 2 psi	-100 kPa to 1360 kPa	100 kPa 200 kPa	20 kPa 20 kPa	-1 kg/cm2 to 14 kg/cm2	1 kg/cm2 2 kg/cm2	0.2 kg/cm2 0.2 kg/cm2	-1 bar to 13.6 bar	1 bar 2 bar	0.2 bar 0.2 bar
0 psi to 15 psi	3 psi	0.1 psi	0 kPa to 100 kPa	30 kPa	1 kPa	0 kg/cm2 to 1.05 kg/cm2	0.3 kg/cm2	0.01 kg/cm2	0 bar to 1.00 bar	0.3 bar	0.01 bar
0 psi to 30 psi	5 psi	0.2 psi	0 kPa to 205 kPa	50 kPa	2 kPa	0 kg/cm2 to 2.1 kg/cm2	0.5 kg/cm2	0.02 kg/cm2	0 bar to 2.05 bar	0.5 bar	0.02 bar
0 psi to 60 psi	10 psi	0.4 psi	0 kPa to 410 kPa	100 kPa	4 kPa	0 kg/cm2 to 4.2 kg/cm2	1 kg/cm2	0.04 kg/cm2	0 bar to 4.10 bar	1 bar	0.04 bar
0 psi to 100 psi	10 psi	1 psi	0 kPa to 680 kPa	100 kPa	10 kPa	0 kg/cm2 to 7 kg/cm2	1 kg/cm2	0.1 kg/cm2	0 bar to 6.8 bar	1 bar	0.1 bar
0 psi to 160 psi	20 psi	1 psi	0 kPa t0 1100 kPa	200 kPa	10 kPa	0 kg/cm2 to 11.0 kg/cm2	2 kg/cm2	0.1 kg/cm2	0 bar to 11 bar	2 bar	0.1 bar
0 psi to 200 psi	20 psi	2 psi	0 kPa to 1360 kPa	200 kPa	20 kPa	0 kg/cm2 to 14 kg/cm2	2 kg/cm2	0.2 kg/cm2	0 bar to 13.6 bar	2 bar	0.2 bar
0 psi to 300 psi	50 psi	2 psi	0 kPa to 2050 kPa	500 kPa	20 kPa	0 kg/cm2 to 21 kg/cm2	5 kg/cm2	0.2 kg/cm2	0 bar to 20.5 bar	5 bar	0.2 bar
0 psi to 400 psi	40 psi	4 psi	0 kPa to 2700 kPa	400 kPa	40 kPa	0 kg/cm2 to 28 kg/cm2	4 kg/cm2	0.4 kg/cm2	0 bar to 27.0 bar	4 bar	0.4 bar
0 psi to 600 psi	100 psi	4 psi	0 kPa to 4100 kPa	1000 kPa	40 kPa	0 kg/cm2 to 42 kg/cm2	10 kg/cm2	0.4 kg/cm2	0 bar to 41.0 bar	10 bar	0.4 bar
0 psi to 1000 psi	100 psi	10 psi	0 kPa to 6800 kPa	1000 kPa	100 kPa	0 kg/cm2 to 70 kg/cm2	10 kg/cm2	1 kg/cm2	0 bar to 68 bar	10 bar	1 bar
0 psi to 1500 psi	300 psi	10 psi	0 kPa to 10000 kPa	3000 kPa	100 kPa	0 kg/cm2 to 105 kg/cm2	30 kg/cm2	1 kg/cm2	0 bar to 100 bar	30 bar	1 bar
0 psi to 2000 psi	200 psi	20 psi	0 kPa to 13600 kPa	2000 kPa	200 kPa	0 kg/cm2 to 140 kg/cm2	20 kg/cm2	2 kg/cm2	0 bar to 136 bar	20 bar	2 bar
0 psi to 3000 psi	500 psi	20 psi	0 kPa to 20500 kPa	5000 kPa	200 kPa	0 kg/cm2 to 210 kg/cm2	50 kg/cm2	2 kg/cm2	0 bar to 205 bar	50 bar	2 bar
0 psi to 5000 psi	500 psi	50 psi	0 kPa to 34000 kPa	5000 kPa	500 kPa	0 kg/cm2 to 350 kg/cm2	50 kg/cm2	5 kg/cm2	0 bar to 340 bar	50 bar	5 bar
0 psi to 6000 psi	1000 psi	40 psi	0 kPa to 41000 kPa	10000 kPa	400 kPa	0 kg/cm2 to 420 kg/cm2	100 kg/cm2	4 kg/cm2	0 bar to 410 bar	100 bar	4 bar
0 psi to 10000 psi	1000 psi	100 psi	0 kPa to 68000 kPa	10000 kPa	1000 kPa	0 kg/cm2 to 700 kg/cm2	100 kg/cm2	10 kg/cm2	0 bar to 680 bar	100 bar	10 bar
0 psi to 15000 psi	3000 psi	100 psi	0 kPa to 103000 kPa	30000 kPa	1000 kPa	0 kg/cm2 to 1050 kg/cm2	300 kg/cm2	10 kg/cm2	0 bar to 1030 bar	300 bar	10 bar
0 psi to 20000 psi	2000 psi	200 psi	0 kPa to 136000 kPa	20000 kPa	2000 kPa	0 kg/cm2 to 1400 kg/cm2	200 kg/cm2	20 kg/cm2	0 bar to 1360 bar	200 bar	20 bar
0 psi to 30000 psi	5000 psi	200 psi	0 kPa to 205000 kPa	50000 kPa	2000 kPa	0 kg/cm2 to 2100 kg/cm2	500 kg/cm2	20 kg/cm2	0 bar to 2050 bar	500 bar	20 bar
0 psi to 40000 psi	4000 psi	400 psi	0 kPa to 270000 kPa	40000 kPa	4000 kPa	0 kg/cm2 to 2800 kg/cm2	400 kg/cm2	40 kg/cm2	0 bar to 2700 bar	400 bar	40 bar
0 psi to 50000 psi	5000 psi	500 psi	0 kPa to 340000 kPa	50000 kPa	5000 kPa	0 kg/cm2 to 3500 kg/cm2	500 kg/cm2	50 kg/cm2	0 bar to 3400 bar	500 bar	50 bar
0 psi to 60000 psi	10000 psi	1000 psi	0 kPa to 410000 kPa	100000 kPa	10000 kPa	0 kg/cm2 to 4200 kg/cm2	1000 kg/cm2	40 kg/cm2	0 bar to 4100 bar	1000 bar	40 bar

Accuracy/Standard Dial Configuration

Applies to:
100 Series Gauges: 1-1/2, 2 and 2-1/2 inch
400 Series Gauges: 1-1/2 inch
900 Series Gauges: 1-1/2, and 2 inch

ACCURACY: ±2.5% Full Scale ASME Grade 2A											
Primary Scale				Secondary Scales							
Dial Range	Figure	Graduation	kPa	Figure	Graduation	kg/cm2	Figure	Graduation	bar	Figure	Graduation
-30 inHg to 0 psi	5 inHg	0.5inHg	**-100 kPa to 0 kPa**	20 kPa	5 kPa	1 kg/cm2 to 0 kg/cm2	0.2 kg/cm2	0.05 kg/cm2	**-1 bar to 0 bar**	0.2 bar	0.05 bar
-30 inHg to 15 psi	10 inHg 5 psi	1 inHg 0.5 psi	**-100 kPa to 100 kPa**	50 kPa 50 kPa	5 kPa 5 kPa	1 kg/cm2 to 1.05 kg/cm2	0.5 kg/cm2 0.5 kg/cm2	0.05 kg/cm2 0.05 kg/cm2	**-1 bar to 1 bar**	0.5 bar 0.5 bar	0.05 bar 0.05 bar
-30 inHg to 30 psi	30 inHg 10 psi	2 inHg 1 psi	**-100 kPa to 205 kPa**	100 kPa 100 kPa	10 kPa 10 kPa	1 kg/cm2 to 2.10 kg/cm2	1 kg/cm2 1 kg/cm2	0.1 kg/cm2 0.1 kg/cm2	**-1 bar to 2.05 bar**	1 bar 1 bar	0.1 bar 0.1 bar
-30 inHg to 60 psi	30 inHg 20 psi	5 inHg 2 psi	**-100 kPa to 410 kPa**	100 kPa 200 kPa	20 kPa 20 kPa	1 kg/cm2 to 4.2 kg/cm2	1 kg/cm2 2 kg/cm2	2 kg/cm2 0.2 kg/cm2	**-1 bar to 4 bar**	1 bar 2 bar	0.2 bar 0.2 bar
-30 inHg to 100 psi	30 inHg 20 psi	10 inHg 5 psi	**-100 kPa to 680 kPa**	100 kPa 200 kPa	50 kPa 50 kPa	1 kg/cm2 to 7 kg/cm2	1 kg/cm2 2 kg/cm2	0.5 kg/cm2 0.5kg/cm2	**-1 bar to 6.8 bar**	1 bar 2 bar	0.5 bar 0.5 bar
-30 inHg to 160 psi	30 inHg 40 psi	10 inHg 4 psi	**-100 kPa to 1100 kPa**	100 kPa 400 kPa	50 kPa 40 kPa	1 kg/cm2 to 11.2 kg/cm2	1 kg/cm2 4 kg/cm2	0.5 kg/cm2 0.4 kg/cm2	**-1 bar to 11 bar**	1 bar 4 bar	0.5 bar 0.4 bar
-30 inHg to 200 psi	30 inHg 40 psi	10 inHg 4 psi	**-100 kPa to 1360 kPa**	100 kPa 400 kPa	50 kPa 40 kPa	1 kg/cm2 to 14 kg/cm2	1 kg/cm2 4 kg/cm2	0.5 kg/cm2 0.4 kg/cm2	**-1 bar to 13.6 bar**	1 bar 4 bar	0.5 bar 0.4 bar
-30 inHg to 300 psi	30 inHg 100 psi	30 inHg 10 psi	**-100 kPa to 2050 kPa**	100 kPa 1000 kPa	100 kPa 100 kPa	1 kg/cm2 to 21 kg/cm2	1 kg/cm2 10 kg/cm2	1 kg/cm2 1 kg/cm2	**-1 bar to 20.5 bar**	1 bar 10 bar	0.1 bar 0.1 bar
0 psi to 15 psi	3 psi	0.5 psi	**0 kPa to 100 kPa**	30 kPa	5 kPa	0 kg/cm2 to 1.05 kg/cm2	0.3 kg/cm2	0.05 kg/cm2	**0 bar to 1.00 bar**	0.3 bar	0.05 bar
0 psi to 30 psi	5 psi	0.5 psi	**0 kPa to 205 kPa**	50 kPa	5 kPa	0 kg/cm2 to 2.1 kg/cm2	0.5 kg/cm2	0.05 kg/cm2	**0 bar to 2.05 bar**	0.5 bar	0.05 bar
0 psi to 60 psi	10 psi	1 psi	**0 kPa to 410 kPa**	100 kPa	10 kPa	0 kg/cm2 to 4.2 kg/cm2	1 kg/cm2	0.01 kg/cm2	**0 bar to 4.10 bar**	1 bar	0.1 bar
0 psi to 100 psi	20 psi	2 psi	**0 kPa to 680 kPa**	200 kPa	20 kPa	0 kg/cm2 to 7 kg/cm2	2 kg/cm2	0.2 kg/cm2	**0 bar to 6.8 bar**	2 bar	0.2 bar
0 psi to 160 psi	40 psi	4 psi	**0 kPa t0 1100 kPa**	400 kPa	40 kPa	0 kg/cm2 to 11.0 kg/cm2	4 kg/cm2	0.4 kg/cm2	**0 bar to 11 bar**	4 bar	0.4 bar
0 psi to 200 psi	40 psi	4 psi	**0 kPa to 1360 kPa**	400 kPa	40 kPa	0 kg/cm2 to 14 kg/cm2	4 kg/cm2	0.4 kg/cm2	**0 bar to 13.6 bar**	4 bar	0.4 bar
0 psi to 300 psi	50 psi	5 psi	**0 kPa to 2050 kPa**	500 kPa	50 kPa	0 kg/cm2 to 21 kg/cm2	5 kg/cm2	0.5 kg/cm2	**0 bar to 20.5 bar**	5 bar	0.5 bar
0 psi to 400 psi	100 psi	10 psi	**0 kPa to 2700 kPa**	1000 kPa	100 kPa	0 kg/cm2 to 28 kg/cm2	2 kg/cm2	0.5 kg/cm2	**0 bar to 27.0 bar**	2 bar	0.5 bar
0 psi to 600 psi	100 psi	10 psi	**0 kPa to 4100 kPa**	1000 kPa	100 kPa	0 kg/cm2 to 42 kg/cm2	10 kg/cm2	1 kg/cm2	**0 bar to 41.0 bar**	10 bar	1 bar
0 psi to 1000 psi	200 psi	20 psi	**0 kPa to 6800 kPa**	2000 kPa	200 kPa	0 kg/cm2 to 70 kg/cm2	20 kg/cm2	2 kg/cm2	**0 bar to 68 bar**	20 bar	2 bar
0 psi to 1500 psi	300 psi	50 psi	**0 kPa to 10000 kPa**	3000 kPa	500 kPa	0 kg/cm2 to 105 kg/cm2	30 kg/cm2	5 kg/cm2	**0 bar to 100 bar**	30 bar	5 bar
0 psi to 2000 psi	400 psi	40 psi	**0 kPa to 13600 kPa**	4000 kPa	400 kPa	0 kg/cm2 to 140 kg/cm2	40 kg/cm2	4 kg/cm2	**0 bar to 136 bar**	40 bar	4 bar
0 psi to 3000 psi	500 psi	50 psi	**0 kPa to 20500 kPa**	5000 kPa	500 kPa	0 kg/cm2 to 210 kg/cm2	50 kg/cm2	5 kg/cm2	**0 bar to 205 bar**	50 bar	5 bar
0 psi to 5000 psi	1000 psi	100 psi	**0 kPa to 34000 kPa**	10000 kPa	1000 kPa	0 kg/cm2 to 350 kg/cm2	100 kg/cm2	10 kg/cm2	**0 bar to 340 bar**	100 bar	10 bar
0 psi to 6000 psi	1000 psi	100 psi	**0 kPa to 41000 kPa**	10000 kPa	1000 kPa	0 kg/cm2 to 420 kg/cm2	100 kg/cm2	10 kg/cm2	**0 bar to 410 bar**	100 bar	10 bar

Accuracy/Standard Dial Configuration

Applies to:
800 Series Gauges

ACCURACY: ±0.25% Full Scale ASME Grade 3A					
Primary Scale			Primary Scale		
Dial Range	Figure	Graduation	Dial Range	Figure	Graduation
0 psi to 30 psi	2 psi	0.1 psi	0 psi to 1500 psi	100 psi	5 psi
0 psi to 60 psi	5 psi	0.2 psi	0 psi to 2000 psi	200 psi	10 psi
0 psi to 100 psi	10 psi	0.5 psi	0 psi to 3000 psi	250 psi	10 psi
0 psi to 160 psi	20 psi	0.8 psi	0 psi to 5000 psi	500 psi	20 psi
0 psi to 200 psi	20 psi	1 psi	0 psi to 6000 psi	500 psi	20 psi
0 psi to 300 psi	25 psi	1 psi	0 psi to 10000 psi	1000 psi	50 psi
0 psi to 400 psi	50 psi	2 psi	0 psi to 15000 psi	1000 psi	50 psi
0 psi to 600 psi	50 psi	2 psi	0 psi to 20000 psi	2000 psi	100 psi
0 psi to 1000 psi	100 psi	5 psi			

PRESSURE & VACUUM CONVERSIONS

Lbs. per Sq. in.	bar	Kilopascals	Kilograms per Sq. cm	Ounces per Sq. in	Inches of Mercury	Millimeters of Mercury	Inches of Water
psi	bar	kPa	kg/cm² *	oz-in²	inHg	mmHg*	inH_2O
1	.0689476	6.89476	.0703069	16	2.03602	51.71485	27.6807
14.5038	1	100	1.019716	232.0608	29.530	750.0626	401.8596
.145038	.01	1	.0101972	2.320608	.295299	7.500610	401.8596
14.2233	.9806649	98.06649	1	227.5739	28.95901	735.5588	393.7118
.0625	.0043092	.4309223	.0043942	1	.1272513	3.23218	1.73004
.4911542	.0338639	3.386389	.0345316	7.85847	1	25.4	13.59548
.0193368	.0013332	.1333225	.0013595	.3093888	.0393701	1	.535255
.0361263	.0024908	.2490819	.0025422	.578020	.0735539	1.868268	1

* 1 kPa = 1 kN/m2, 1 mmHg = 1 Torr, 1Kg/cm² = 1 kp/cm²
(Conversions of: H_2O are at 39.2°F (4°C): Hg are at 32°F (0°C)

CONVERSIONS FOR HYDRAULIC RAM CAPACITY

psi x AREA = (LBS.) FORCE

$$\text{TONS} = \frac{\text{psi} \times .7854 \times D2}{2000}$$

$$\text{psi} = \frac{\text{TONS}}{D2 \times .0003927}$$

For further assistance with conversions please consult the factory.

Gauge Configurations for High Temperature Applications

140° F is the maximum recommended ambient media temperature for NOSHOK pressure gauges with brass wetted parts, and 212° F for gauges with stainless steel wetted parts. For applications in which media reaches temperatures above 212° F, NOSHOK offers several accessories designed to prevent damage to the gauge, and maintain maximum performance and accuracy.

Recommended gauge configurations are listed below. Please note that these guidelines are intended to be general recommendations. Many conditions may affect the amount of temperature reduction; including ambient temperature, media type, and process configuration.

- **Up to 140° F**: All NOSHOK pressure gauges will provide peak performance in this range
- **Up to 212° F**: A gauge with stainless steel wetted parts is required, such as the NOSHOK 400 and 740 Series. Do NOT use a gauge with brass wetted parts.
- **Up to 287° F**: Accessories must be used to maintain gauge integrity and accuracy. Options include:
  - o **Pigtail Steam Syphon**: for use with a stainless steel wetted parts gauge. Should be used in steam applications and systems that contain superheated vapor. The pigtail buffers the instrument from the damaging effects of high temperature steam by holding system fluid in the coil to provide a steam trap for the fluid to condensate and dissipate the heat. Reduces temperature by 75° F/ft on average. Multiple configurations are available.
  - o **Armored Capillary Tube**: for use with a stainless steel wetted parts gauge. Average temperature reduction is 75° F/ft. Two feet of capillary tube can increase the media temperature range to 362° F. Standard length is five feet, provided with thread connections; other lengths available on request. Gauge must be separated from the process with a mounting bracket or flange, and the extra capillary length can be rolled up if necessary. Recommended for use with clean media or gases.
  - o **Long Pipe**: 1/2″ in diameter or greater in either steel or stainless steel construction with a stainless steel wetted parts gauge. Average temperature reduction is 75° F/ft. Pipes can be cut and threaded for custom applications.
  - o **Cooling Element**: for use with a stainless steel wetted parts gauge. Average temperature reduction is 75° F/4″ element. Use with other accessories for additional temperature decrease (long pipe, syphon, diaphragm seal).
  - o **Cooling Tower**: for use with a stainless steel wetted parts gauge. Approved usage up to temperatures of 312° F. Average temperature reduction is 100° F/8″ cooling tower. Recommended for use with clean media or gases.
- **Up to 300° F**: A high temperature system fill is required, such as silicone D.C 550, and a diaphragm seal is recommended on a stainless steel wetted parts gauge.

For more information, contact NOSHOK at 440.243.0888

Three Process Conditions That Affect Accuracy And Performance Of Pressure Gauges

And Solutions To Manage Them

The technology used in today's pressure gauges has been around since the mid-eighteen hundreds, and the pressure gauge is still one of the most common methods of measuring pressure today. The majority of pressure gauges today still incorporate the bourdon tube, socket, and geared movement; along with a pointer and dial to indicate process pressure.

Since the pressure gauge is a purely mechanical device, attention to three process conditions is necessary. The three factors that can adversely affect accuracy and performance are **Temperature, Vibration and Pulsation**.

Temperature Influence:

For every 100° shift in temperature from which the gauge is calibrated, the user can experience up to a 2% additional error in reading. The cause is the change in the elasticity or spring rate of the bourdon tube element with temperature. While it is difficult to circumvent the influence of ambient temperature, we can address the influence of process temperature. In steam service, the common practice is to install coil syphons or pigtail syphons to dissipate process heat. Another common practice is to install a diaphragm seal with capillary to separate the gauge from the high heat source. There are many options available with fill fluid in the seal and capillary system to withstand temperatures up to 600° F. In severe cold ambient conditions, many users elect to heat trace their instrumentation via electric or steam trace. Process and ambient temperature is an important consideration when selecting and applying pressure gauges.

Vibration Influence:

Vibration due to pumps, motors, and other rotating equipment can cause excess wear and possible premature failure of internal working parts of a pressure gauge, which include the bourdon tube and the movement or gear mechanism. Vibration also causes difficulty in accurate reading of the gauge, due to pointer oscillation. One of the most common causes of pressure gauge failure is exposure to continuous vibration. The most widely accepted remedy is to utilize a liquid filled pressure gauge. The fill fluid of choice is either glycerine or silicone. Liquid filled gauges address not only pointer oscillation, but also serve to protect and lubricate the internal geared movement.

Pulsation Influence:

Process pulsation can occur around the discharge of pumps as well as quick operating valves. Many users assume that liquid filling a pressure gauge will fully address pulsation. Although a liquid filled gauge helps to dampen the effects of pulsation, it often does not fully address this process condition. Pulsation dampeners are installed upstream of the gauge socket and they can be a piston-type snubber, a sintered metal snubber, or a threaded in-flow restrictor in the socket of the gauge. A needle valve installed upstream of the gauge that is "pinched down" or slightly opened, is another common practice to address pulsation. It is not recommended to rely solely on a needle valve to address pulsation, due to the fact that the user could inadvertently open the valve, and thereby negate flow restriction. In clean fluids (gases or clean low viscosity liquids) a threaded orifice/flow restrictor or a sintered metal snubber is the least costly way to address pulsation. In dirtier and higher viscosity fluids a piston snubber is usually installed.

Summary:

Temperature, vibration and pulsation are three process conditions that adversely affect a pressure gauge. Being aware of these three process conditions, and taking the necessary steps to address them, can help minimize accuracy errors and add to the service life of the pressure gauge.

Frequently Asked Questions

Q: What is the purpose of the ventable & non-ventable fill plug/relief plug?
A: A fill plug seals the fill hole in a pressure gauge case. On liquid filled pressure gauges, a ventable fill plug is used to relieve internal case pressures that occur due to thermal expansion of the fill fluid. In non-filled dry gauges, a non-ventable fill plug is used to occasionally drain the interior of the case from condensate or relieve internal case pressures. Ventable fill plugs incorporate a vent pin to open and close a hole for relieving internal case pressures and do not have to be removed from the case hole like non-ventable fill plugs.

Q: What are the designed overpressure ratings for NOSHOK gauges?
A: Overpressure ratings are specific to the gauge type, pressure range and accuracy ratings of the gauge. Normal overpressure protection can range from 1.1X to 1.3X depending on the gauge selected. NOSHOK gauges comply to the EN-837-1 and ASME B40-100 standards in regards to overpressure protection. When selecting a pressure gauge, it is recommended that the normal system pressure be maintained around half of the full range of the gauge as to avoid overpressure conditions.

Q: How is the accuracy of a gauge affected by a Maximum Indicating Pointer?
A: A Maximum Indicating Pointer (MIP), also commonly referred to as a Tell Tale Pointer, adds an additional ±1% error to the pressure gauge due to the increase load on the bourdon tube.

Q: What is a Certified Calibration?
A: Certified Calibrations provide the user with a serial numbered gauge along with a calibration certificate that it has been certified in accordance to the pressure gauge standard with instruments that are traceable to NIST with accuracies of at least 4 to 1.

Q: What is a Certificate of Conformance?
A: A Certificate of Conformance is a formal statement on company letterhead stating that an instrument complies with a particular standard. It contains the signatures of the required personnel. These Certificates are often needed to show industry inspectors that a system and its components are in compliance.

Q: How often does a gauge need to be calibrated?
A: NOSHOK pressure gauges require little or no calibration within the Warranty period. Some applications may be more aggressive than others, resulting in an increased frequency in the need for calibration. The environmental limitations for the pressure gauge series should be observed in all cases. Gauges used in situations outside these requirements may result in inaccuracies, premature wear and/or failure of the gauge and would require additional maintenance. The frequency of calibration, therefore, is up to the user to judge.

Q: When is it recommended to use an orifice?
A: Orifices are a type of snubber. On pressure systems that have rapidly increasing or decreasing pressure spikes, orifices lessen the effects of these energy pulses by blocking the wave energy using restricted flow. They are recommended in dynamic pressure applications with mild pressure spikes.

Q: When is a diaphragm seal used, and when would you apply a diaphragm seal and capillary?
A: A diaphragm is used to isolate and protect the instrument from the process media. Damaging process media may include corrosives, particulates, temperatures, or any state that is not suitable for direct contact with the measuring element. Diaphragms indirectly transmit system pressures by segregating the process pressure with a thin flexible membrane that in turn transfers the pressure through a fill fluid to the instrument. Diaphragms are often used in conjunction with capillaries to further distance the instrument from the process media. Capillary tubes transmit the diaphragm fill fluid to the instrument. Capillary tubes come in several lengths and provide the user a means to measure in a remote location and may also act as heat dissipaters in high temperature applications.

Q: What is the purpose of liquid filling a gauge, and in what applications would a liquid filled gauge be used?
A: Primarily, in applications that have vibrations or pulsations, liquid filling enables reading the dial pointer by dampening the movement. Liquid filling should be considered in any system that has high dynamic operating conditions. In general, liquid filling helps extend the life of a gauge. It reduces damaging resonance induced fracturing, reduces frictional wear, prevents aggressive ambient air from entering, prevents condensation formation, and improves reliability.

Q: How does temperature affect the accuracy of a pressure gauge?
A: Temperature changes affect the stiffness of a bourdon tube. The stiffness change is produced by a combination of changes in the elastic (Young's) modulus and a change in linear dimensions due to linear expansion and contraction. The error caused by temperature change will follow the approximate formula: ± 0.04 x (t2 –t,) % of the span.

Continued on next page

Q: How do you size a pressure gauge relative to process pressures, normal operating pressures, and maximum pressures in the process? (Dynamic or static process pressures)
A: The pressure range of a gauge should be 10% over the maximum working pressure in static conditions (no pressure fluctuations). In dynamic conditions, the gauge range should be 40% over the maximum working pressure. Ideally, the pressure gauge range should be selected for a midscale reading during normal operating pressures.

Q: What does a gauge accuracy statement really mean?
(Examples: 1% of span, 3-2-3 percent of span)
A: Accuracy is the conformity of a gauge indication to an accepted standard or true value. Accuracy is the difference between the true value and the gauge indication expressed as a percent of the gauge span. It is the combined effects of method, observer, apparatus, and environment. Accuracy error includes hysteresis and repeatability errors. An ASME B40.1 class B gauge has three accuracies. A 3-2-3 percent of span designation stands for 3% in the first quarter of the scale, 2% in the middle half of the scale and 3% in the upper quarter of the scale.

Q: What applications require the various lens materials, and to what maximum temperature can each be subjected?
A: Lens materials include Instrument Glass, Laminated Safety Glass, Tempered Glass, and plastic. Glass lenses are used for abrasion, chemical and wear resistant properties. Laminated safety glass reduces the possibility of shattering if the bourdon tube ruptures. Tempered glass is 2 to 5 times stronger the plain glass. Plastic lenses are used for impact, corrosion and chemical resistance. Special attention should be paid to the temperature and corrosive environments. Polycarbonate is selected for its superior impact resistance, Plexiglass™ for its clarity and scratch resistance and Homalite for is superior chemical resistance. In general, gauges with plastic lenses should remain below 140° F.

Q: In what situation would a pigtail syphon be used?
A: Pigtail syphons should be used in steam applications and systems that contain superheated vapor. The pigtail buffers the instrument from the damaging effects high temperature steam by holding system fluid in the coil to provide a steam trap for the fluid to condensate and dissipate the heat.

Q: What is the application for a gauge cleaned for O2 service?
A: Oxygen (O2) cleaning is performed on gauges that are used on oxygen service applications. The cleaning removes all hydrocarbons (oil and grease are common hydrocarbons) that can react violently, resulting in explosions, fire, and injury to personnel and property. Oxygen clean gauges can be used in any application that requires the cleanliness level associated with oxygen clean gauge. Glycerine fill gauge cannot be used on oxygen systems.

Q: What fill fluids options are available, and in what applications would each be used?
A: Glycerine is the most common fill fluid. Because of its unique fluid properties, Glycerine has become the standard for liquid filled gauges (see "What is the purpose of liquid filling a gauge?"). Glycerine's clarity, viscosity, stability, cost, solubility, low toxicity make Glycerine an ideal fluid for many applications. Mineral oils and silicon fluids are used when temperature extremes, chemical compatibility or viscosity fall outside of Glycerine use. Halocarbon is an inert fluid that is compatible with chlorine, oxygen service, and some high temperature applications. Keep in mind that Glycerine is not compatible with strong oxidizers such as oxygen, chlorine, hydrogen peroxide, or nitric acid. Glycerine & Silicon are explosive in contact with chlorine. Halocarbon is explosive in contact with aluminum and magnesium.

Q: What is the difference between ANSI vs. DIN specification, and which applies to specific gauges?
A: ANSI is the official U.S. representative to the International Organization for Standardization (ISO) and, via the U.S. National Committee, the International Electrotechnical Commission (IEC). ANSI is also a member of the International Accreditation Forum (IAF) for the American National Standards Institute. It approves American National Standards which include ASME B40-100. DIN stands for Deutsches Institut für Normung e.V. (DIN; in English is the German Institute for Standardization) is the German national organization for standardization and is that country's (ISO) member body. Many of the DIN standards have been converted to ISO standards.

Q: What is the purpose of throttle devices such as throttle plugs and screws?
A: Throttle devices limit the flow to the pressure instrument. They are a type of snubber.

Q: What is the purpose of an over and under load stop in a pressure gauge?
A: The tip motion of a bourdon tube is translated to rotary motion of a pointer by a linkage and sector gear acting on the pointer pinion gear. Stop pins limit the movement of the bourdon tube, sector or pointer rotation in over and under pressure conditions that would otherwise move the pointer pinion off the sector gear which would damage the gauge.

NOTES

NOTES

NOTES

All from world class technology.

Combined with real-world stamina.

The highest value with the industry's best warranty.

And all from a company with a 40+ year record of customer satisfaction.

All from your Single Source Instrumentation Company.

The Instrumentation Company

NOSHOK INCORPORATED

Corporate Headquarters
1010 West Bagley Road
Berea, Ohio 44017
Ph: 440.243.0888
Fax: 440.243.3472
E-mail: noshok@noshok.com
Web: www.noshok.com

ISO 9001:2008 REGISTERED