Tolomatic
EXCELLENCE IN MOTION®

MG & MGS MAGNETICALLY COUPLED RODLESS CYLINDER/SLIDE

A-O Systems, Inc. www.airoil.com

CONTENTS

MAG COUPLED CYLINDER

ENDURANCE TECHNOLOGY℠

Endurance Technology features are designed for maximum durability to provide extended service life.

With magnetically coupled cylinders there is no mechanical connection of the carrier to the piston. The fully enclosed actuator body prevents contaminants from entering or escaping the actuator body. The perfect choice for applications where there are environmental concerns. Features internal polyurethane bumpers for dampened end-of-travel impact, anodized aluminum heads and actuator block, and a field-repairable design to practically eliminate maintenance downtime.

Air or oil actuated to 100 PSIG. With no mechanical piston connection, the actuator block can be easily rotated for increased mounting flexibility.

MGS MAG SLIDE

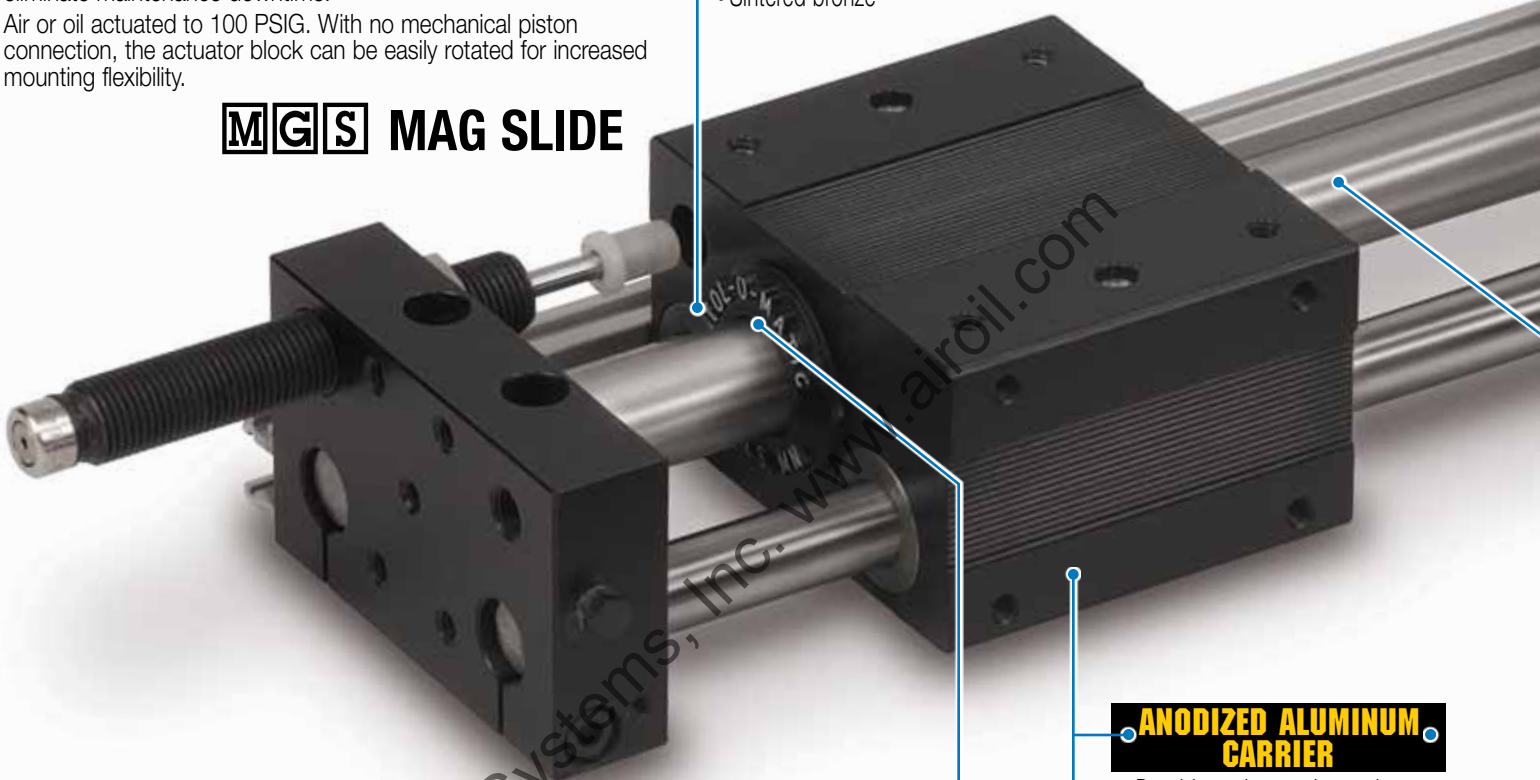

BEARING CHOICE
- Precision linear ball bearing or
- Sintered bronze

ANODIZED ALUMINUM CARRIER
- Durable and corrosion resistant
- Precision milled

FIELD REPAIRABLE DESIGN
- Unique in the industry
- Durable and reliable

ENGINEERED ELASTOMER WIPER
- No leak construction
- Durable, long lasting material

MG MAG CYLINDER

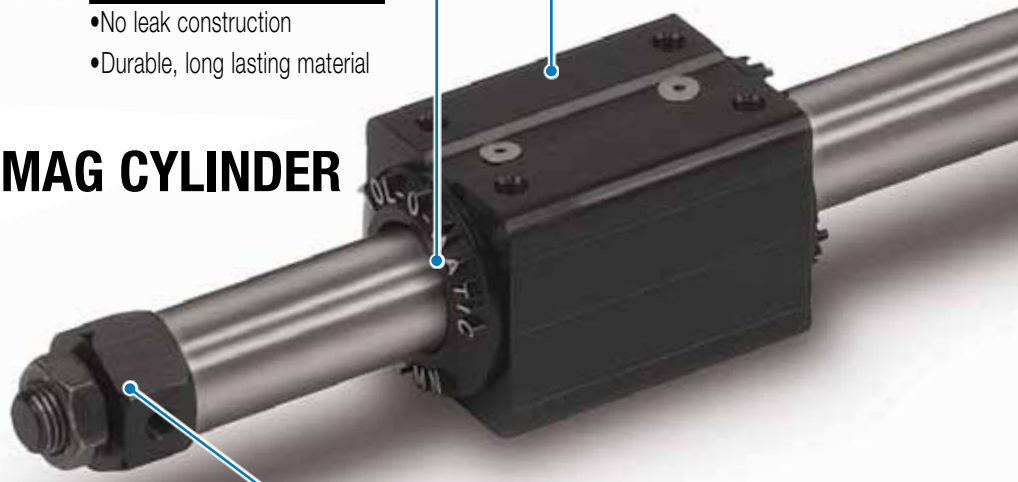

ANODIZED ALUMINUM HEADS
- Durable and corrosion resistant

Air-Oil Systems, Inc. www.airoil.com

TOLOMATIC…THE RODLESS CYLINDER LEADER

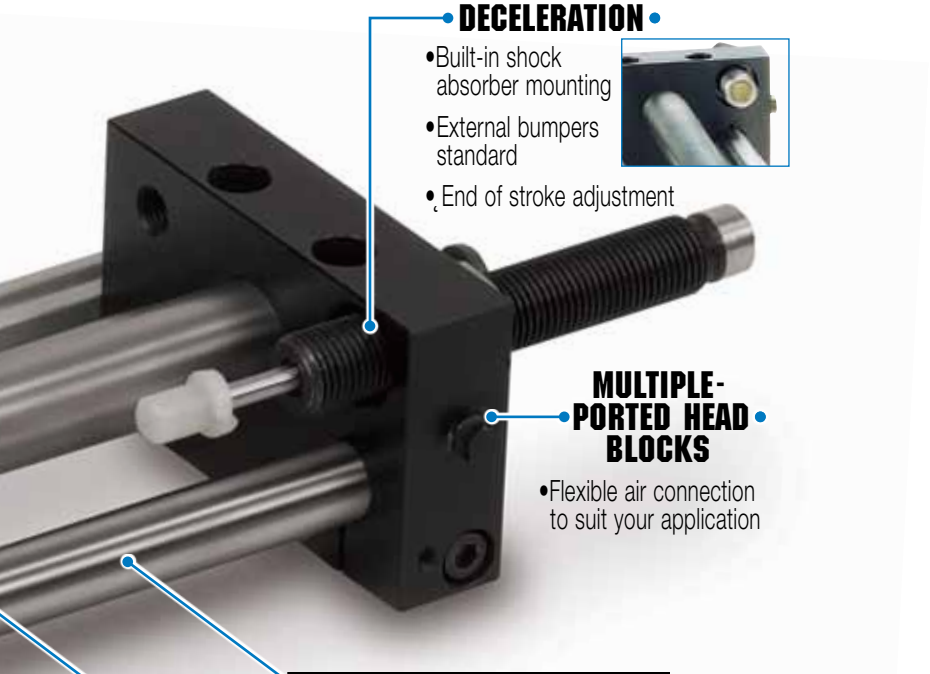

DECELERATION

- Built-in shock absorber mounting
- External bumpers standard
- End of stroke adjustment

MULTIPLE-PORTED HEAD BLOCKS

- Flexible air connection to suit your application

HARDENED STEEL SHAFTS

- Corrosion resistant, durable and stable support system

STAINLESS STEEL TUBING

- Precision milled interior on these long lasting, corrosion resistant tubes

MAGNETIC FORCE CONNECTS PISTON TO CARRIER

- Rare earth magnets create positive connecton between piston and carrier
- 3 coupling strengths
- Decouples at known force (useful in a variety of applications)
- Wear bearing for long life

OPTIONS - CYLINDER

FLOATING MOUNT BRACKET FL

- Compensates for non-parallelism between cylinder and independently guided load
- Makes installation easier, increases actuator block bearing life

FOOT MOUNT FM

- Best mounting choice in most applications
- Made from plated stamped steel

SWITCHES

- Available in Reed, Hall-effect and Triac
- 15ft. cable with flying leads; available with quick-disconnect couplers

CORROSION RESISTANT

- Stainless steel components with seals for use in harsh environments

OPTIONS - SLIDE

SHOCK ABSORBERS SL SH

- Smoother deceleration
- Self-compensates for load changes
- Reduces need for equipment maintenance

PROXIMITY SENSOR

- L.E.D. deivce senses end-of-stroke with one of two normally open inductive dc proximity sensors.

SWITCHES

- Available in Reed, Hall-effect and Triac
- 15ft. cable with flying leads; available with quick-disconnect couplers

PNEUMATICALLY OR HYDRAULICALLY POWERED

- No leak construction
- Up to 100 PSI

5 DAYS BUILT-TO-ORDER

Air-Oil Systems, Inc. www.airoil.com

MG Magnetically Coupled Cylinder - All Sizes

PERFORMANCE

MGA, MGB, MGC

ORDER CODES

MGA025, MGB025, MGC025
MGA038, MGB038, MGC038
MGA062, MGB062, MGC062
MGA100, MGB100, MGC100
inch (U.S. Standard)

MG OPTIONS	Page
Floating Mount Bracket	MG_9
Foot Mounts	MG_8
Switches	MG_10
MORE INFORMATION	**Page**
Application Guidelines	MG_18
Ordering	MG_19
Selection	MG_16

THEORETICAL FORCE vs PRESSURE

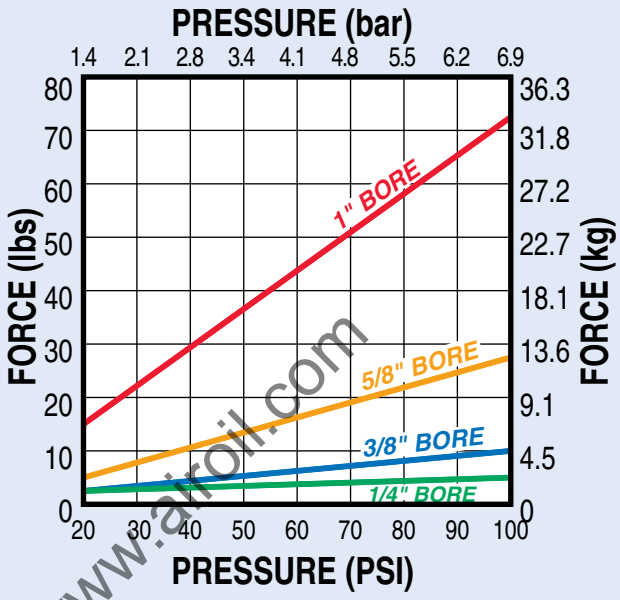

MAGNETIC COUPLING STRENGTH

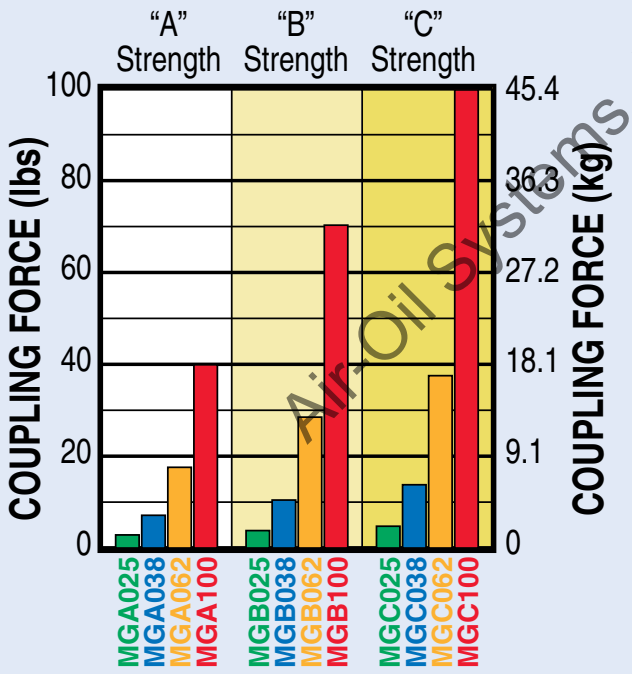

NOTES REGARDING MAGNETIC COUPLING

1) De-coupling will occur if coupling force is exceeded.

2) All coupling forces listed are for horizontal applications. For vertical applications, Tolomatic recommends using a 2-to-1 coupling force safety factor.

TUBE DEFLECTION

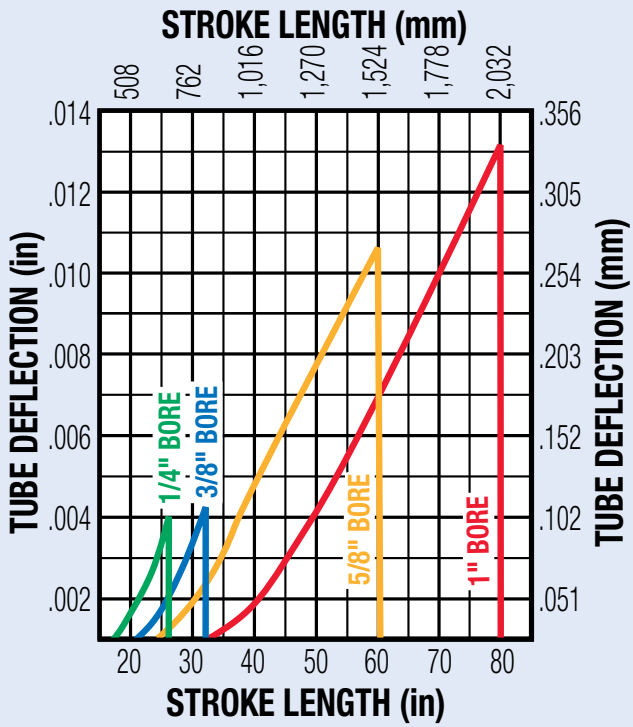

Air-Oil Systems, Inc. www.airoil.com

MG Magnetically Coupled Cylinder - All Sizes

SPECIFICATIONS

MGA, MGB, MGC BENDING MOMENT, WEIGHT, ETC.

MAGNET CODE	SIZE	BORE SIZE		BASE WEIGHT		WEIGHT/UNIT		MAX. STROKE		MAX. BENDING MOMENT My		MAX. PRESSURE		TEMPERATURE RANGE	
		in	mm	lbs	kg	lbs/in	kg/mm	in	mm	in-lbs	N-m	PSI	bar	°F	°C
A	025	0.250	6.4	0.12	0.05	0.01	0.00018	26.00	660.4	3.00	0.339	100	6.895	20° to 140°	-7° to 60°
B				0.12	0.05										
C				0.13	0.06										
A	038	0.375	9.5	0.20	0.09	0.01	0.00018	32.00	812.8	4.00	0.452				
B				0.21	0.10										
C				0.24	0.11										
A	062	0.625	16	0.49	0.22	0.02	0.00036	60.00	1524.0	9.00	1.017				
B				0.51	0.23										
C				0.57	0.26										
A	100	1.000	25	1.52	0.69	0.04	0.00071	80.00	2032.0	35.00	3.954				
B				1.55	0.70										
C				1.79	0.81										

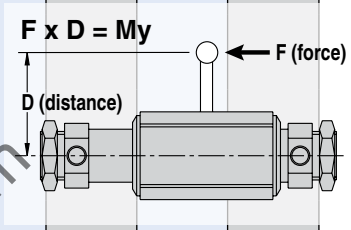

***For longer strokes, alternate materials, mounting and/or fasteners – consult Tolomatic**

DIMENSIONS

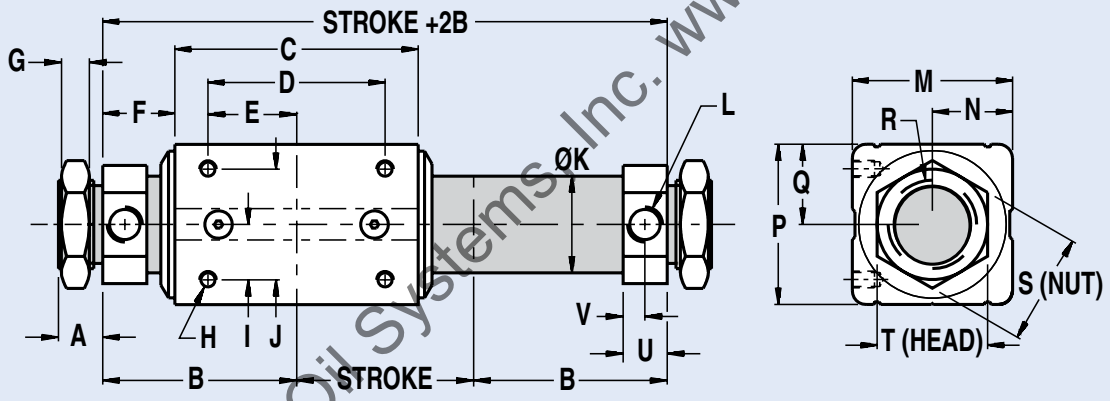

	BORE	F	G	H	I	J	K	L	M	N	P	Q	R	S	T	U	V
025	0.250	0.47	0.23	#5-40UNC x .18	0.20	0.39	Ø.31	#10-32	0.67	0.34	0.67	0.34	3/8-24UNF	0.56	0.56	0.41	0.21
038	0.375	0.50	0.23	#5-40UNC x .18	0.31	0.63	Ø.44	#10-32	0.98	0.49	0.98	0.49	3/8-24UNF	0.56	0.56	0.41	0.21
062	0.625	0.67	0.23	#8-32UNC x .24	0.37	0.75	Ø.69	#10-32	1.38	0.69	1.38	0.69	3/8-24UNF	0.56	0.75	0.44	0.22
100	1.000	0.81	0.32	#10-32UNC x .25	0.62	1.25	Ø1.09	1/8 NPT	1.81	0.91	1.81	0.91	1-12UNF	1.25	1.25	0.50	0.25

Dimensions in inches

	BORE	A	B	B*	C	C*	D	E
025	0.250	0.38	1.25	1.32	1.56	1.70	1.00	0.50
038	0.375	0.38	1.25	1.35	1.50	1.70	1.12	0.56
062	0.625	0.38	1.62	1.75	1.92	2.19	1.50	0.75
100	1.000	0.50	2.19	2.40	2.75	3.17	2.00	1.00

Dimensions in inches

**For "C strength" configurations only.*

	BORE	A	B	B*	C	C*	D	E
025	6.4	9.7	31.8	33.5	39.6	43.2	25.4	12.7
038	9.5	9.7	31.8	34.3	38.1	43.2	28.4	14.2
062	16	9.7	41.1	44.5	48.8	55.6	38.1	19.1
100	25	12.7	55.6	61.0	69.9	80.5	50.8	25.4

Dimensions in millimeters

	BORE	F	G	H	I	J	K	L	M	N	P	Q	R	S	T	U	V
025	6.4	11.9	5.8	#5-40UNC x .18	5.1	9.9	7.9	#10-32	17.0	8.6	17.0	8.6	3/8-24UNF	14.2	14.2	10.4	5.3
038	9.5	12.7	5.8	#5-40UNC x .18	7.9	16.0	11.2	#10-32	24.9	12.4	24.9	12.4	3/8-24UNF	14.2	14.2	10.4	5.3
062	16	17.0	5.8	#8-32UNC x .24	9.4	19.1	17.5	#10-32	35.1	17.5	35.1	17.5	3/8-24UNF	14.2	19.1	11.2	5.6
100	25	20.6	8.1	#10-32UNC x .25	15.7	31.8	27.7	1/8 NPT	46.0	23.1	46.0	23.1	1-12UNF	31.8	31.8	12.7	6.4

Dimensions in millimeters

Air-Oil Systems, Inc. www.airoil.com

MGS Magnetically Coupled Slide - All Sizes

PERFORMANCE

MGS

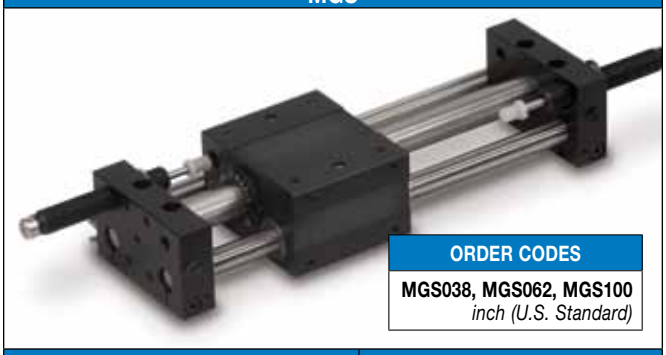

ORDER CODES

MGS038, MGS062, MGS100
inch (U.S. Standard)

MGS OPTIONS	Page
Proximity Sensor	MG_12
Shock Absorber	MG_13
Switches	MG_10
MORE INFORMATION	**Page**
Application Guidelines	MG_18
Ordering	MG_20
Selection	MG_17

THEORETICAL FORCE vs PRESSURE

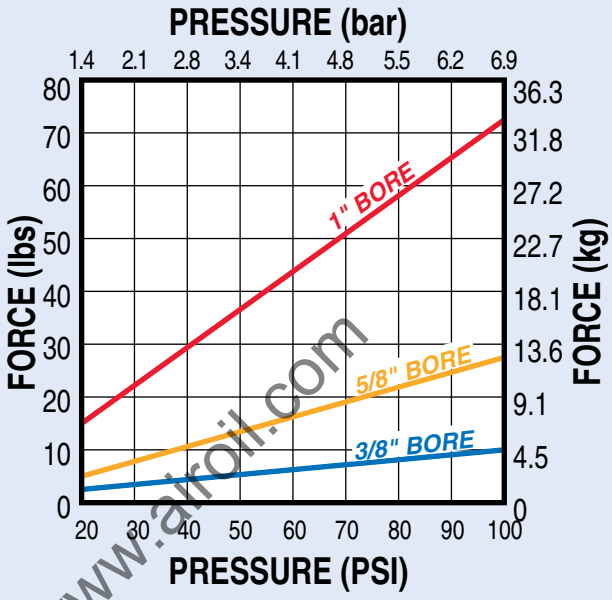

MAGNETIC COUPLING STRENGTH

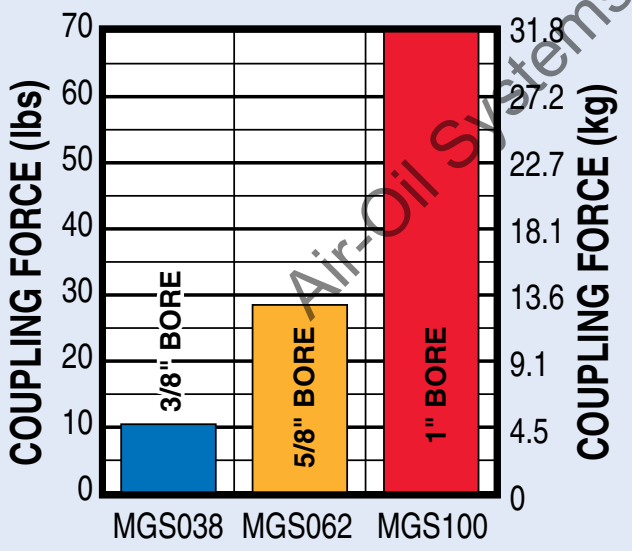

NOTES REGARDING MAGNETIC COUPLING

1) De-coupling will occur if coupling force is exceeded.

2) All coupling forces listed are for horizontal applications. For vertical applications, Tolomatic recommends using a 2-to-1 coupling force safety factor.

LOAD vs STROKE

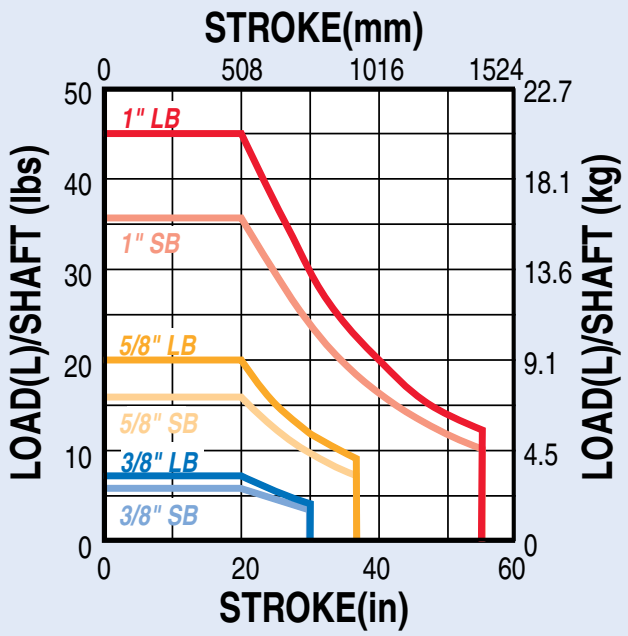

SB = Sintered Bronze Bearings
LB = Linear Ball Bearings

Also see formulae on page MG_12

Air-Oil Systems, Inc. www.airoil.com

MGS Magnetically Coupled Slide - All Sizes

SPECIFICATIONS

SIZE	BORE SIZE in	BORE SIZE mm	BASE WEIGHT lbs	BASE WEIGHT kg	WEIGHT/UNIT lbs/in	WEIGHT/UNIT kg/mm	MAX. STROKE in	MAX. STROKE mm	MAX. PRESSURE PSI	MAX. PRESSURE bar	TEMPERATURE RANGE °F	TEMPERATURE RANGE °C
038	0.375	9.5	1.24	0.56	0.004	0.000071	30.00	762.0	100	6.895	20° to 140°	-7° to 60°
062	0.625	16	3.14	1.42	0.130	0.002322	37.00	939.8				
100	1.000	25	4.89	2.22	0.180	0.003214	55.00	1397.0				

***For longer strokes, alternate materials, mounting and/or fasteners – consult Tolomatic**

DIMENSIONS

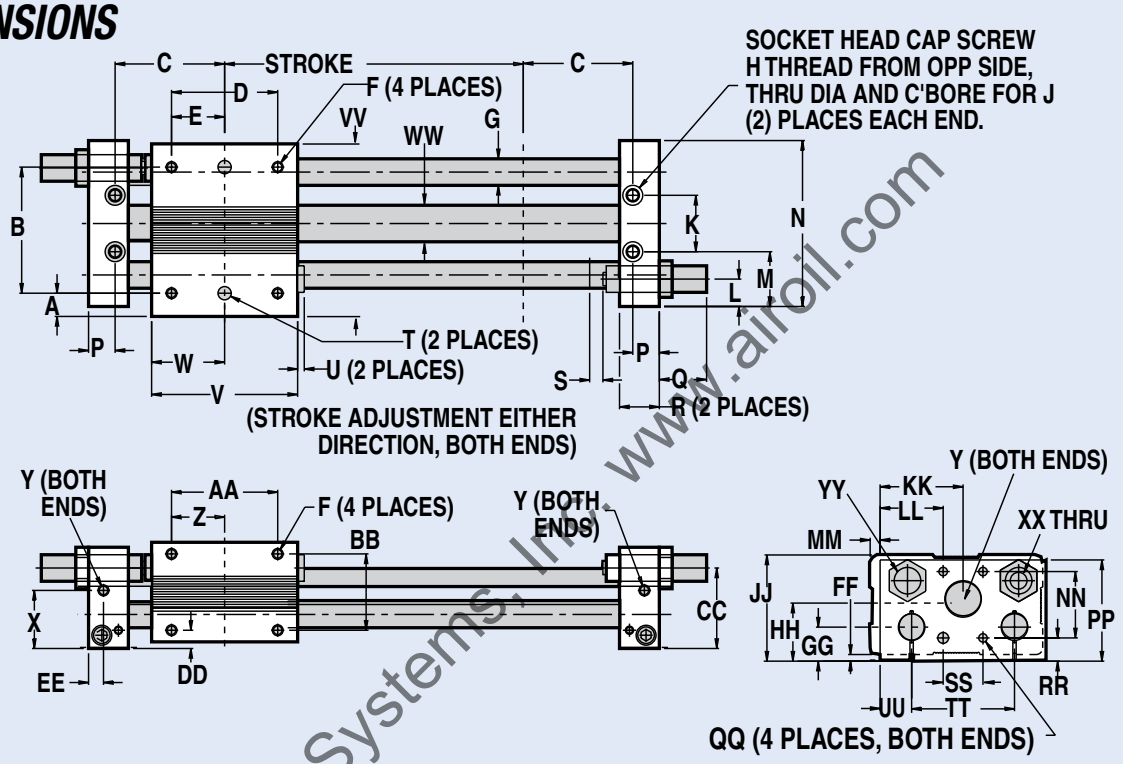

Air-Oil Systems, Inc. www.airoil.com

MODEL	BORE	A	B*	C	D	E	F	G	H	J	K	L	M	N	P	Q	R	S	T	U	V	W
MGS038	0.375	0.30	1.875	1.66	1.19	0.59	10-24 x .38 DP	0.38	1/4-20 x .50 DP	#8	0.75	0.45	0.81	2.38	0.41	1.26 max.	0.63	0.25	.2495/.2500 x .20 DP	0.13	2.00	1.00
MGS062	0.625	0.44	2.375	2.06	2.00	1.00	10-24 x .38 DP	0.50	1/4-20 x .50 DP	#10	1.06	0.52	1.03	3.12	0.50	1.14 max.	0.75	0.25	.2495/.2500 x .20 DP	0.13	2.75	1.38
MGS100	1.000	0.42	3.250	2.28	2.50	1.25	10-24 x .38 DP	0.63	1/4-20 x .50 DP	#10	1.63	0.63	1.22	4.06	0.53	1.14 max.	0.75	0.25	.2495/.2500 x .20 DP	0.13	3.25	1.63

MODEL	X	Y	Z	AA	BB	CC	DD	EE	FF	GG	HH	JJ	KK	LL	MM	NN	PP	QQ	RR	SS	TT	UU	VV	WW	XX	YY
MGS038	1.03	#10-32 Port	0.81	1.63	1.06	1.34	0.44	0.19	0.25	0.66	1.08	1.69	1.19	0.81	0.16	0.75	1.62	8-32 x .31 DP	0.56	0.75	1.44	0.47	2.47	0.44	M8-1	3/8-32 Thru,Ø.500x.31DP
MGS062	1.09	#10-32 Port	1.00	2.00	1.44	1.52	0.34	0.28	0.13	0.64	1.08	2.00	1.56	1.19	0.19	1.25	1.91	10-24 x .38 DP	0.44	0.75	1.94	0.59	3.25	0.69	M8-1	1/2-20 Thru,Ø.625x.33DP
MGS100	1.31	1/8-27 Port	1.00	2.00	1.69	1.75	0.34	0.28	0.13	0.81	1.31	2.34	2.08	1.47	0.09	1.13	2.22	10-24 x .38 DP	0.75	1.13	2.63	0.72	4.09	1.09	M8-1	9/16-18 Thru,Ø.688x.31DP

Tolerance between dowel pins is ±.001"

Above dimensions in inches

MODEL	BORE	A	B*	C	D	E	F	G	H	J	K	L	M	N	P	Q	R	S	T	U	V	W
MGS038	9.5	7.6	47.6	42.2	30.2	15.0	10-24 x .38 DP	9.7	1/4-20 x .50 DP	#8	19.1	11.4	20.6	60.5	10.4	32.0 max.	16.0	6.4	.2495/.2500 x .20 DP	3.3	50.8	25.4
MGS062	15.9	11.2	60.3	52.3	50.8	25.4	10-24 x .38 DP	12.7	1/4-20 x .50 DP	#10	26.9	13.2	26.2	79.2	12.7	29.0 max.	19.1	6.4	.2495/.2500 x .20 DP	3.3	69.9	35.1
MGS100	25.4	10.7	82.6	57.9	63.5	31.8	10-24 x .38 DP	16.0	1/4-20 x .50 DP	#10	41.4	16.0	31.0	103.1	13.5	29.0 max.	19.1	6.4	.2495/.2500 x .20 DP	3.3	82.6	41.4

MODEL	X	Y	Z	AA	BB	CC	DD	EE	FF	GG	HH	JJ	KK	LL	MM	NN	PP	QQ	RR	SS	TT	UU	VV	WW	XX	YY
MGS038	26.2	#10-32 Port	20.6	41.4	26.9	34.0	11.2	4.8	6.4	16.8	27.4	42.9	30.2	20.6	4.1	19.1	41.1	8-32 x .31 DP	14.2	19.1	36.6	11.9	62.7	11.2	M8-1	3/8-32 Thru,Ø.500x.31DP
MGS062	27.7	#10-32 Port	25.4	50.8	36.6	38.6	8.6	7.1	3.3	16.3	27.4	50.8	39.6	30.2	4.8	31.8	48.5	10-24 x .38 DP	11.2	19.1	49.3	15.0	82.6	17.5	M8-1	1/2-20 Thru,Ø.625x.33DP
MGS100	33.3	1/8-27 Port	25.4	50.8	42.9	44.5	8.6	7.1	3.3	20.6	33.3	59.4	52.8	37.3	2.3	28.7	56.4	10-24 x .38 DP	19.1	28.7	66.8	18.3	103.9	27.7	M8-1	9/16-18 Thru,Ø.688x.31DP

Tolerance between dowel pins is ±.025mm

Above dimensions in millimeters

MG Foot Mount - All Sizes

3D CAD AVAILABLE AT WWW.TOLOMATIC.COM

Foot Mount

ORDER CODE
FM_

Foot mounts are an excellent mounting alternative. Made from plated stamped steel, foot mounts are attached to cylinder heads as shown in the dimension drawing, below. Foot mounts may be ordered for one or both ends of the cylinder. Foot mounts can then be attached to almost any surface at a 90° angle to provide solid support without affecting stroke.

DIMENSIONS

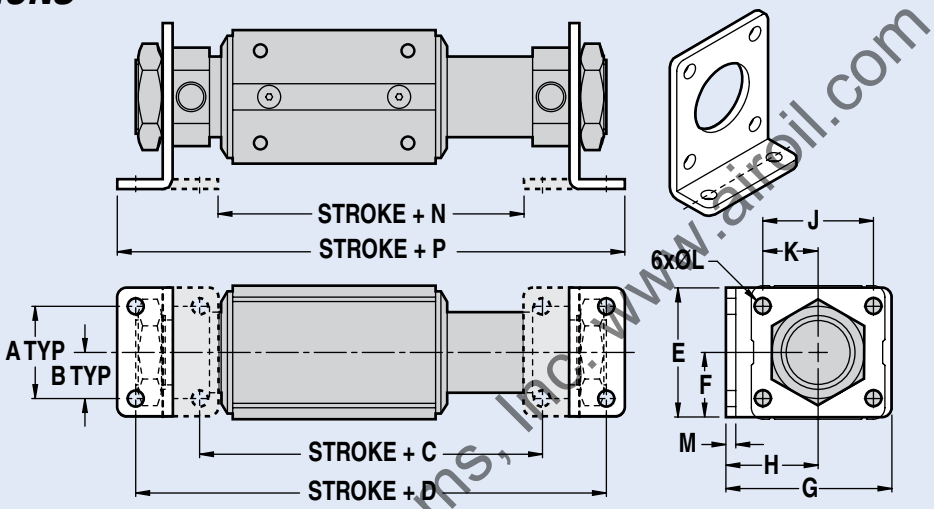

Air-Oil Systems, Inc. www.airoil.com

	BORE	A	B	C	C*	D	D*	E	F	G	H	J	K	L	M	N	N*	P	P*
025	0.250	1.13	0.56	2.06	2.20	3.06	3.20	1.50	0.75	1.16	0.72	0.50	0.25	Ø.17	0.06	1.49	1.89	3.36	3.23
038	0.375	1.13	0.56	2.06	2.26	3.06	3.26	1.50	0.75	1.16	0.72	0.50	0.25	Ø.17	0.06	1.49	1.95	3.36	3.29
062	0.625	1.13	0.56	2.80	3.07	3.80	4.07	1.50	0.75	1.16	0.72	0.50	0.25	Ø.17	0.06	2.50	2.77	4.12	4.39
100	1.000	1.25	0.63	3.65	4.07	5.38	5.80	1.75	0.88	2.25	1.25	1.50	0.75	Ø.22	0.13	3.15	3.58	5.88	6.31

Dimensions in inches

***For "C strength" configurations only.**

	BORE	A	B	C	C*	D	D*	E	F	G	H	J	K	L	M	N	N*	P	P*
025	*6.4*	*28.7*	*14.2*	*52.3*	*55.9*	*77.7*	*81.3*	*38.1*	*19.1*	*29.5*	*18.3*	*12.7*	*6.4*	*4.3*	*1.5*	*37.8*	*48.0*	*85.3*	*82.0*
038	*9.5*	*28.7*	*14.2*	*52.3*	*57.4*	*77.7*	*82.8*	*38.1*	*19.1*	*29.5*	*18.3*	*12.7*	*6.4*	*4.3*	*1.5*	*37.8*	*49.5*	*85.3*	*83.6*
062	*16*	*28.7*	*14.2*	*71.1*	*78.0*	*96.5*	*103.4*	*38.1*	*19.1*	*29.5*	*18.3*	*12.7*	*6.4*	*4.3*	*1.5*	*63.5*	*70.4*	*104.6*	*111.5*
100	*25*	*31.8*	*16.0*	*92.7*	*103.4*	*136.7*	*147.3*	*44.5*	*22.4*	*57.2*	*31.8*	*38.1*	*19.1*	*5.6*	*3.3*	*80.0*	*90.9*	*149.4*	*160.3*

Dimensions in millimeters

SIZE	BORE SIZE		WEIGHT	
	in	*mm*	lbs	*kg*
025	0.250	*6.4*	0.07	*0.032*
038	0.375	*9.5*	0.07	*0.032*
062	0.625	*16*	0.17	*0.077*
100	1.000	*25*	0.28	*0.127*

MG Floating Mount Bracket - All Sizes

3D CAD AVAILABLE AT WWW.TOLOMATIC.COM

Floating Mount Bracket

ORDER CODE
FL

The integral floating mount bracket is available for applications in which a load is externally guided and supported and there is a need to compensate for non-parallelism between the cylinder and the independently-guided load.

Loads which are not parallel to the cylinder may result in the cylinder binding if the floating mount bracket is not used. Also, use of the floating mount is highly recommended to provide easier set-up of guide/support system and to help increase actuator block bearing life.

DIMENSIONS

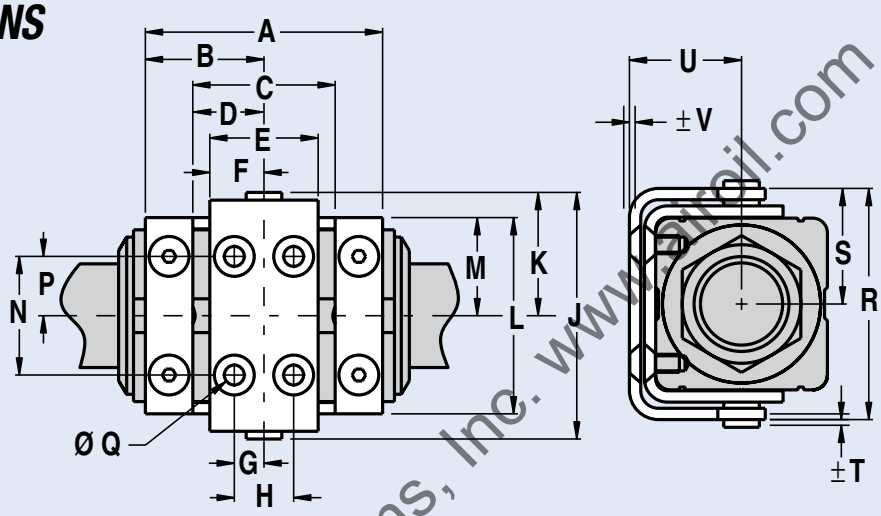

	BORE	A	B	C	D	E	F	G	H	J	K	L	M	N	P	Q	R	S	T	U	V
025	0.250	1.34	0.67	0.66	0.33	0.63	0.31	0.16	0.31	1.26	0.63	0.87	0.43	0.37	0.18	Ø.14	1.14	0.57	0.04	0.53	0.08
038	0.375	1.47	0.73	0.78	0.39	0.69	0.34	0.16	0.31	1.57	0.78	1.18	0.59	0.63	0.31	Ø.14	1.45	0.72	0.04	0.69	0.08
062	0.625	1.88	0.94	1.12	0.56	0.79	0.39	0.19	0.38	2.09	1.05	1.64	0.82	0.75	0.38	Ø.19	1.99	0.99	0.04	0.93	0.08
100	1.000	2.50	1.25	1.50	0.75	1.14	0.57	0.31	0.62	2.60	1.30	2.07	1.03	1.25	0.63	Ø.248	2.44	1.22	0.06	1.20	0.08

Dimensions in inches

	BORE	A	B	C	D	E	F	G	H	J	K	L	M	N	P	Q	R	S	T	U	V
025	*6.4*	*34.0*	*17.0*	*16.8*	*8.4*	*16.0*	*7.9*	*4.1*	*7.9*	*32.0*	*16.0*	*22.1*	*10.9*	*9.4*	*4.6*	*3.6*	*29.0*	*14.5*	*1.0*	*13.5*	*2.0*
038	*9.5*	*37.3*	*18.5*	*19.8*	*9.9*	*17.5*	*8.6*	*4.1*	*7.9*	*39.9*	*19.8*	*30.0*	*15.0*	*16.0*	*7.9*	*3.6*	*36.8*	*18.3*	*1.0*	*17.5*	*2.0*
062	*15.9*	*47.8*	*23.9*	*28.4*	*14.2*	*20.1*	*9.9*	*4.8*	*9.7*	*53.1*	*26.7*	*41.7*	*20.8*	*19.1*	*9.7*	*4.8*	*50.5*	*25.1*	*1.0*	*23.6*	*2.0*
100	*25.4*	*63.5*	*31.8*	*38.1*	*19.1*	*29.0*	*14.5*	*7.9*	*15.7*	*66.0*	*33.0*	*52.6*	*26.2*	*31.8*	*16.0*	*6.3*	*62.0*	*31.0*	*1.5*	*30.5*	*2.0*

Dimensions in millimeters

SIZE	BORE SIZE		WEIGHT	
	in	*mm*	lbs	*kg*
025	0.250	*6.4*	0.06	*0.027*
038	0.375	*9.5*	0.08	*0.036*
062	0.625	*16*	0.18	*0.082*
100	1.000	*25*	0.33	*0.150*

Air-Oil Systems, Inc. www.airoil.com

MG & MGS Switches - All Sizes

SWITCHES

There are 10 sensing choices: DC reed, form A (open) or form C (open or closed); AC reed (Triac, open); Hall-effect, sourcing, PNP (open); Hall-effect, sinking, NPN (open); each with either flying leads or QD (quick disconnect). Commonly used to send analog signals to PLC (programmable logic controllers), TLL, CMOS circuit or other controller device. These switches are activated by the actuator's magnet.

Switches contain reverse polarity protection. QD cables are shielded; shield should be terminated at flying lead end.

If necessary to remove factory installed switches, be sure to reinstall on the same of side of actuator with scored face of switch toward internal magnet.

SPECIFICATIONS

		REED DC				REED AC		HALL-EFFECT DC			
ORDER CODE		RT	RM	BT	BM	CT	CM	TT	TM	KT	KM
PART NUMBER		3600-9082	3600-9083	3600-9084	3600-9085	3600-9086	3600-9087	3600-9088	3600-9089	3600-9090	3600-9091
LEAD		5m	QD*	5m	QD*	5m	QD*	5m	QD*	5m	QD*
CABLE SHIELDING		Unshielded	Shielded†	Unshielded	Shielded†	Unshielded	Shielded†	Unshielded	Shielded†	Unshielded	Shielded†
SWITCHING LOGIC		"A" Normally Open		"C" Normally Open or Closed		Triac Normally Open		PNP (Sourcing) Normally Open		NPN (Sinking) Normally Open	
MECHANICAL CONTACTS		Single-Pole Single-Throw		Single-Pole Double-Throw		Single-Pole Single-Throw		NO, These Are Solid State Components			
COIL DIRECT		Yes		Yes		Yes		—			
POWER LED		None		None		None		None		None	
SIGNAL LED		Red						Red		Red	
OPERATING VOLTAGE		200 Vdc max.		120 Vdc max.		120 Vac max.		5 - 25 Vdc			
OUTPUT RATING		—				—		25 Vdc, 200mA dc			
OPERATING TIME		0.6 msec max. (including bounce)		0.7 msec max. (including bounce)		—		< 10 micro sec.			
OPERATING TEMPERATURE		-40°F [-40°C] to 158°F [70°C]						0°F [-18°C] to 150°F [66°C]			
RELEASE TIME		1.0 msec. max.				—		—			
ON TRIP POINT		—				—		150 Gauss maximum			
OFF TRIP POINT		—				—		40 Gauss minimum			
**POWER RATING (WATTS)		10.0 §		3.0 §§		10.0		5.0			
VOLTAGE DROP		2.6 V typical at 100 mA		NA		—		—			
RESISTANCE		0.1 Ω Initial (Max.)				—		—			
CURRENT CONSUMPTION		—				1 Amp at 86°F [30°C]	0.5 Amp at 140°F [60°C]	200 mA at 25 Vdc			
FREQUENCY		—				47 - 63 Hz		—			
CABLE MIN. BEND RADIUS	STATIC	0.630" *[16mm]*									
	DYNAMIC	Not Recommended									

CAUTION: DO NOT OVER TIGHTEN SWITCH HARDWARE WHEN INSTALLING!

** **WARNING**: Do not exceed power rating (Watt = Voltage X Amperage). Permanent damage to sensor will occur.

*QD = Quick Disconnect; Male coupler is located 6" [152mm] from sensor,
Female coupler to flying lead (part #2503-1025) distance is 197" [5m] also see Cable Shielding specification above

REPLACEMENT OF QD SWITCHES MANUFACTURED BEFORE JULY 1, 1997: It will be necessary to replace or rewire the female end coupler.

CURRENT
Quick disconnect Wiring

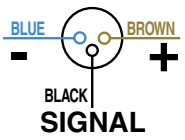

OLD
Quick disconnect Wiring

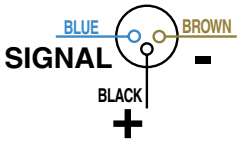

Reed Switch Life Expectancy: Up to 200,000,000 cycles (depending on load current, duty cycle and environmental conditions)

†Shielded from the female quick disconnect coupler to the flying leads. Shield should be terminated at flying lead end.

§ Maximum current 500mA (not to exceed 10VA) Refer to Temperature vs. Current graph and Voltage Derating graph

§§ Maximum current 250mA (not to exceed 3VA) Refer to Temperature vs. Current graph and Voltage Derating graph

Air-Oil Systems, Inc www.airoil.com

3D CAD AVAILABLE AT WWW.TOLOMATIC.COM

PERFORMANCE

TEMP. vs CURRENT, DC REED

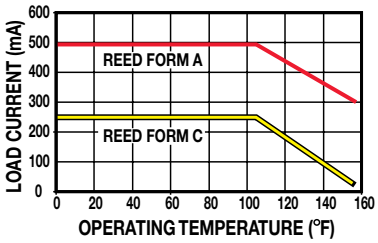

TEMP. vs CURRENT, AC REED

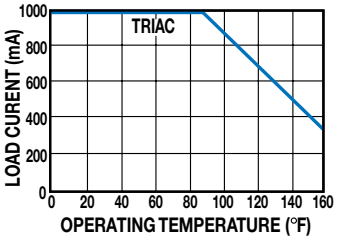

VOLTAGE DERATING, DC REED

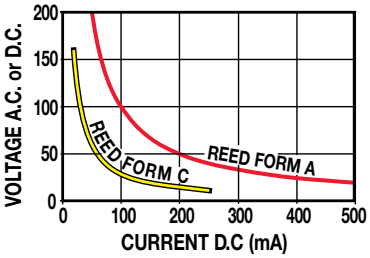

WIRING DIAGRAMS

RT & RM DC REED, FORM A

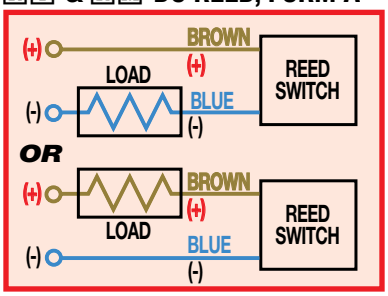

CT & CM AC REED, TRIAC

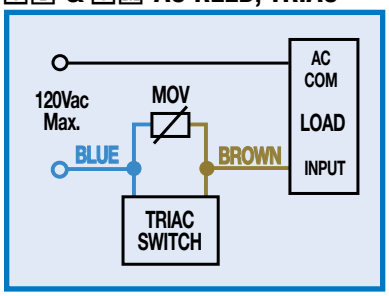

BT & BM DC REED, FORM C

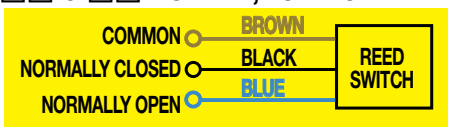

TT & TM HALL-EFFECT, SOURCING, PNP

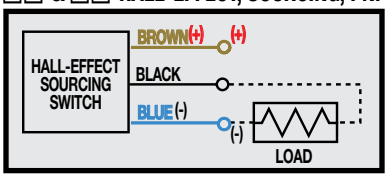

KT & KM HALL-EFFECT, SINKING, NPN

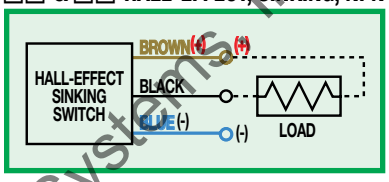

INSTALLATION INFORMATION

THE NOTCHED FACE OF THE SWITCH INDICATES THE SENSING SURFACE AND MUST FACE TOWARD THE MAGNET.

MG Magnetically Coupled Cylinder

DIMENSIONS

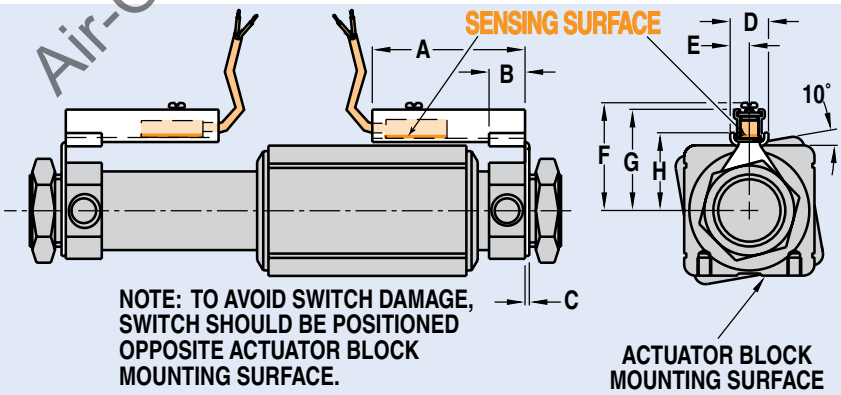

	BORE	A	B	C	D	E	F	G	H
025	0.250	1.23	0.40	0.06	0.53	0.27	0.91	0.88	0.51
038	0.375	1.23	0.40	0.06	0.53	0.27	1.07	1.04	0.67
062	0.625	1.60	0.45	0.06	0.53	0.27	1.27	1.24	0.87
100	1.000	2.12	0.50	0.06	0.53	0.27	1.48	1.45	1.08

Dimensions in inches

	BORE	A	B	C	D	E	F	G	H
025	6.4	31.24	10.16	1.52	13.46	6.86	23.16	22.35	12.95
038	9.5	31.24	10.16	1.52	13.46	6.86	27.18	26.42	17.02
062	15.9	40.64	11.43	1.52	13.46	6.86	32.26	31.50	22.10
100	25.4	53.85	12.70	1.52	13.46	6.86	37.59	36.83	27.43

Dimensions in millimeters

Air-Oil Systems Inc. www.airoil.com

MGS Switches - All Sizes

3D CAD AVAILABLE AT WWW.TOLOMATIC.COM

MGS Magnetically Coupled Slide

DIMENSIONS

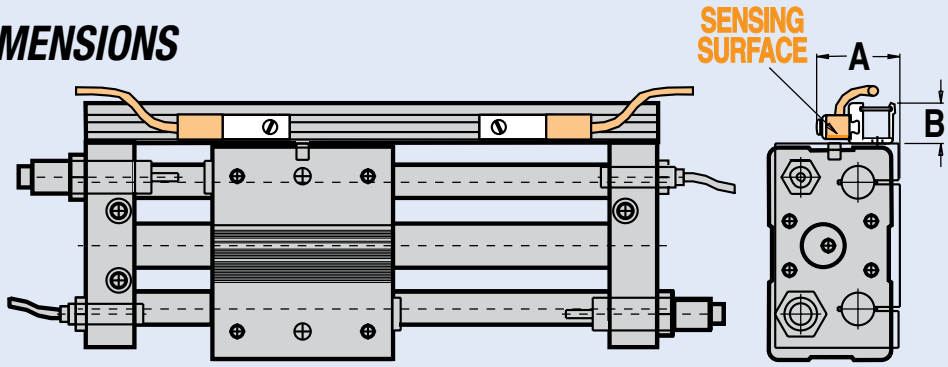

	BORE	A	B
038	0.375	1.24	0.47
062	0.625	1.16	0.47
100	1.000	1.47	0.47

Dimensions in inches

	BORE	A	B
038	9.5	31.50	11.94
062	15.9	29.46	11.94
100	25.4	37.34	11.94

Dimensions in millimeters

MGS Proximity Sensor

Proximity Sensor

ORDER CODES
NP_, PN_

This L.E.D. device senses end-of-stroke with one of two normally open inductive d.c. proximity sensors. NPN supplies a sinking signal; PNP supplies a sourcing signal to a device such as a programmable logic controller.

Ambient Temp.: -13° to 158° F., (-25° to 70° C.)

NEMA Encl. Rating: 1, 3, 4, 6, 12, 13

Lead Length: 6.56 feet (2.0m)

Max. Sensing Distance (LS05): .059" (1.5mm)

Max. Sensing Distance (LS10): .039" (1.0mm)

AV-Oil Systems, Inc. www.airoil.com

Wiring Diagrams

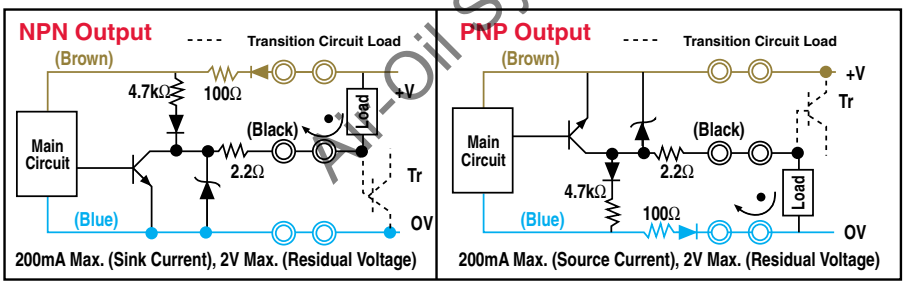

DIMENSIONS

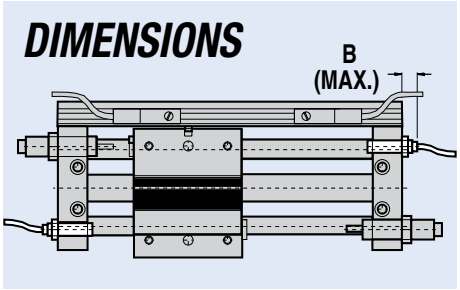

SIZE	BORE in	BORE mm	B in	B mm	WEIGHT lbs	WEIGHT kg
038	0.375	9.5	0.63	16.0	0.24	0.109
062	0.625	16	0.52	13.2	0.24	0.109
100	1.000	25	0.52	13.2	0.25	0.113

NPN Output

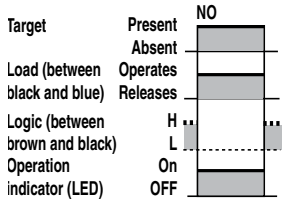

Short-Circuit Indication

The load output immediately turns off and remains off until the short-circuit protection is reset.

PNP Output

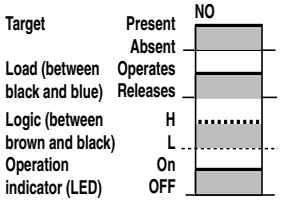

Resetting Short-Circuit Protection

To reset the short-circuit protection, repair the short. The short-circuit protection will then automatically reset.

Tolomatic EXCELLENCE IN MOTION

MGS Shock Absorbers - All Sizes

SHOCK ABSORBERS

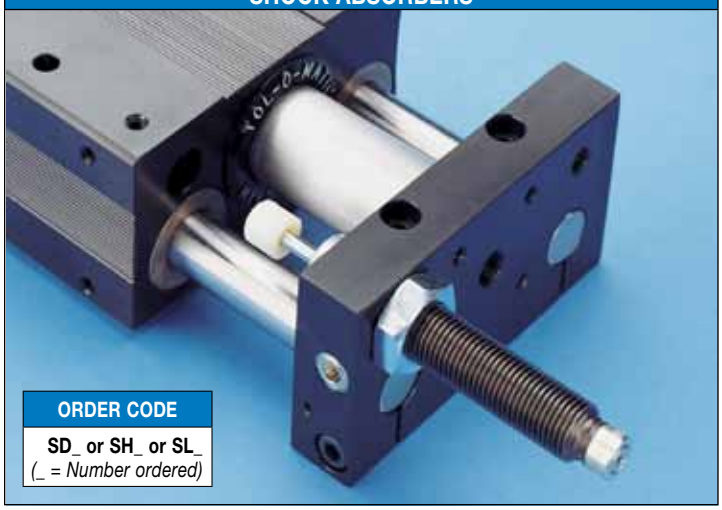

ORDER CODE
SD_ or SH_ or SL_ *(_ = Number ordered)*

Magnetically coupled slides with standard internal bumpers offer an effective method of decelerating loads. However, magnetically coupled slides are capable of carrying heavier loads at higher velocities than the internal bumpers can absorb. Optional shock absorbers can be used to increase the unit's life and broaden the application range for the magnetically coupled slide you have chosen.

Typical shock absorber life varies between 1-2 million cycles (depending on environment). Appropriate preventative maintenance should be considered in high cyclic applications.

⚠ CAUTION: In applications which result in a load bending moment at deceleration, care should be taken to decelerate the load rather than the carrier of the magnetically coupled slide.

Air-Oil Systems, Inc. www.airoil.com

DIMENSIONS

3D CAD AVAILABLE AT WWW.TOLOMATIC.COM

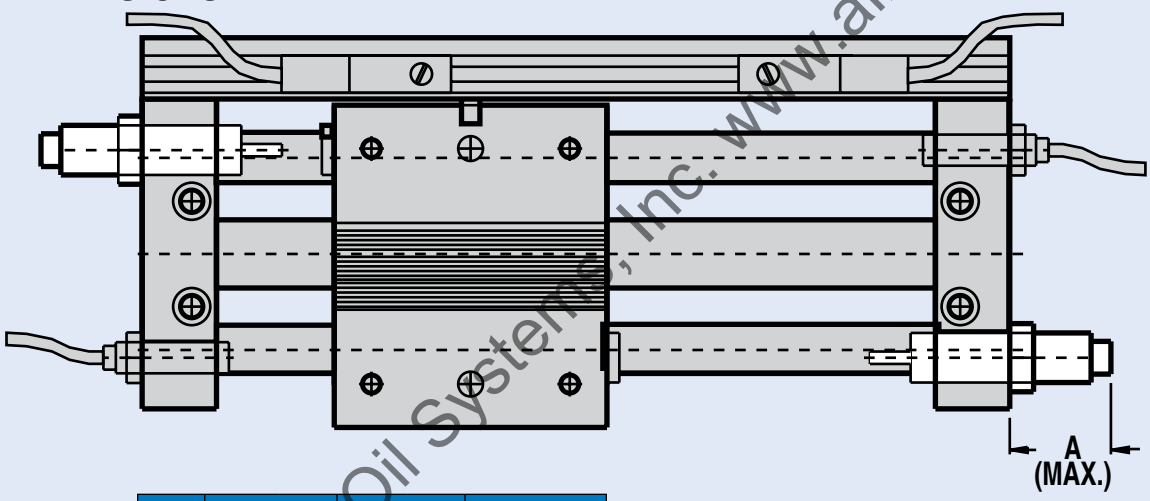

SIZE	BORE		A		WEIGHT	
	in	*mm*	in	*mm*	lbs	*kg*
038	0.375	*9.5*	0.94	*23.9*	0.01	*0.005*
062	0.625	*16*	2.48	*63.0*	0.02	*0.009*
100	1.000	*25*	2.63	*66.8*	0.04	*0.018*

MGS Shock Absorbers - All Sizes

PERFORMANCE

VELOCITY vs LOAD

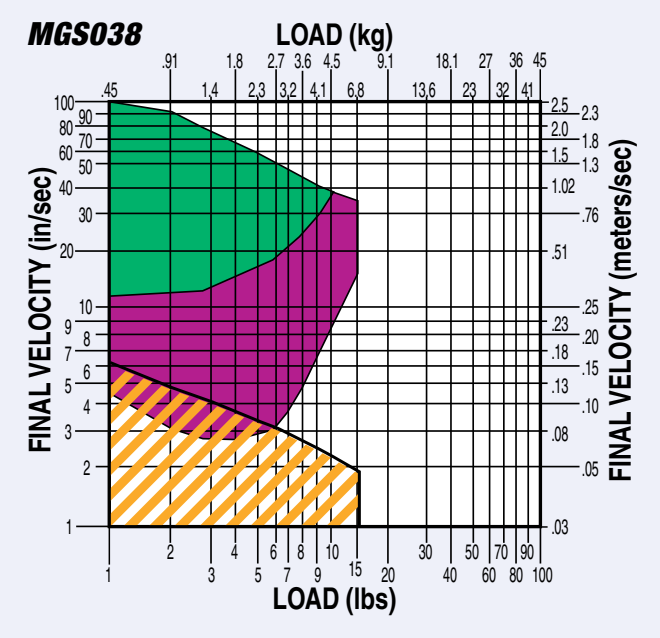

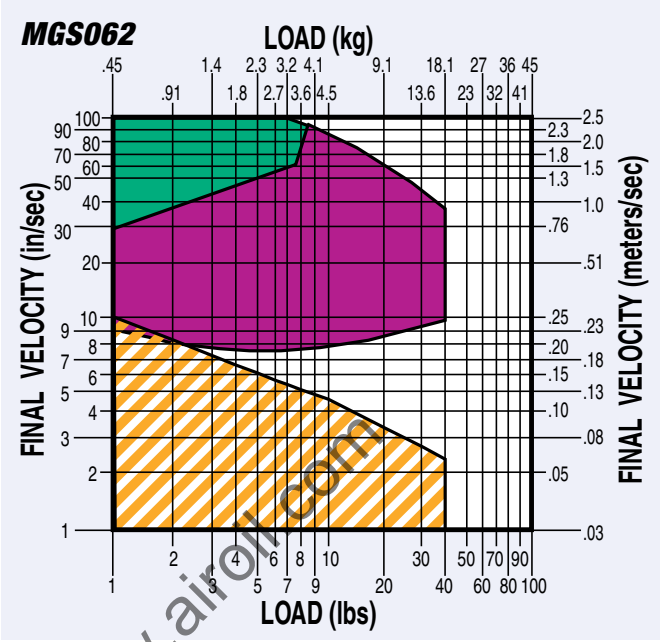

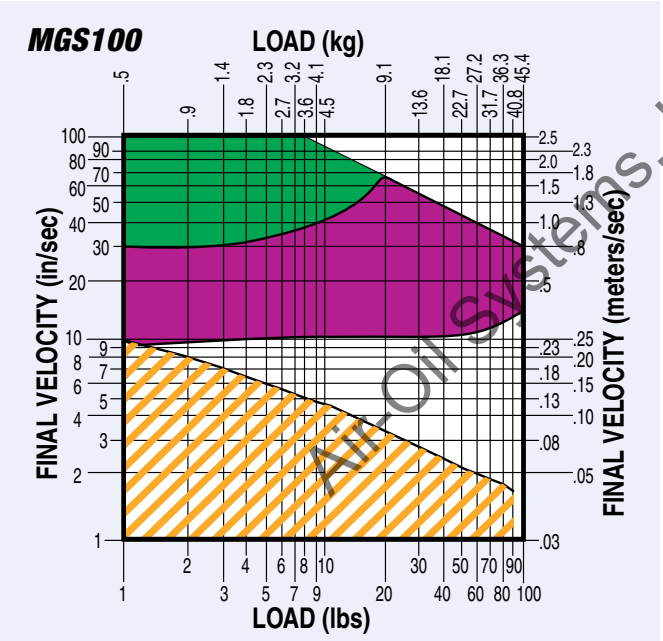

LIGHT DUTY (Light load/High velocity)

HEAVY DUTY (Heavy load/Low velocity)

Bumpers

NOTE: If final (or impact) velocity cannot be calculated directly, a reasonable guideline to use is 2 x average velocity.

Air-Oil Systems, Inc. www.airoil.com

Application Data Worksheet

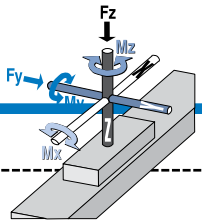

STROKE LENGTH _____
☐ inch (SK) (U.S. Standard) ☐ millimeters (Metric)

AVAILABLE AIR PRESSURE _____
☐ PSI (U.S. Standard) ☐ bar (Metric)

REQUIRED THRUST FORCE _____
☐ lbf (U.S. Standard) ☐ N (Metric)

LOAD _____
☐ lb (U.S. Standard) ☐ kg (Metric)

LOAD CENTER OF GRAVITY DISTANCE TO CARRIER CENTER
d_x _____
d_y _____
d_z _____
☐ inch (U.S. Standard) ☐ millimeters (Metric)

FORCES APPLIED TO CARRIER
F_z _____
F_y _____
☐ lbf (U.S. Standard) ☐ N (Metric)

BENDING MOMENTS APPLIED TO CARRIER
M_x _____
M_y _____
M_z _____
☐ in-lbs (U.S. Standard) ☐ N-m (Metric)

FINAL VELOCITY _____
☐ in/sec (U.S. Standard) ☐ mm/sec (Metric)

MOVE TIME sec. _____

NO. OF CYCLES _____
☐ per minute ☐ per hour

ORIENTATION

☐ Horizontal

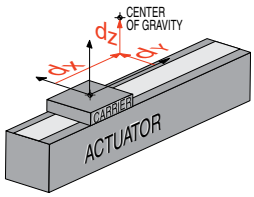

☐ Side

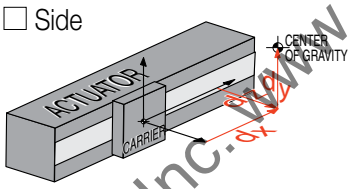

☐ Horizontal Down

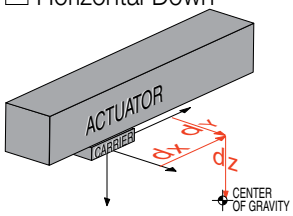

☐ Vertical

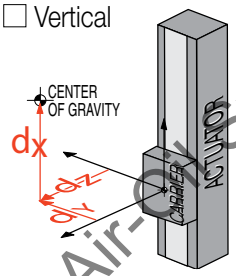

☐ Angled α _____

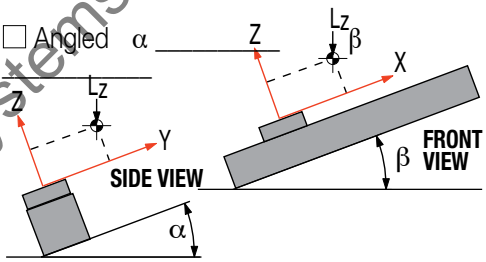

OTHER ISSUES:
(i.e. Environment, Temperature, Contamination, etc.)
_____
_____
_____
_____

Contact information: _____
_____
_____
_____

STOP Fax (1-763-478-8080) or call Tolomatic (1-800-328-2174) with the above information. We will provide any assistance needed to determine the proper actuator.

Air-Oil Systems, Inc. www.airoil.com

MG: Mag Coupled Cylinder Selection Guidelines - All Sizes

EXTERNAL LOAD GUIDANCE AND SUPPORT

The process of selecting a magnetically coupled cylinder for a given application can be complex. It is highly recommended that you contact Tolomatic or a Tolomatic Distributor for assistance in selecting the best actuator for your application. The following overview of the selection guidelines are for educational purposes only.

1 COMPILE APPLICATION REQUIREMENTS

To determine the appropriate Magnetically Coupled Cylinder model for an application, compile the following information:

- Available pressure (PSI)
- Weight of load (lbs. or kgs.)
- Orientation of load (lbs. or kgs.)
- Velocity of load (in./sec. or mm/sec.)
- Stroke length (in. or mm)

2 SELECT CYLINDER SIZE

- Consult the Theoretical Force vs. Pressure charts.
- Cross-reference the load force (or load weight if force is not known) and the available operating pressure. If the intersection falls below the diagonal line, and if moments do not exceed maximum values listed for that model (see Step 3), the actuator will accommodate the application. If the intersection is above the diagonal line, a larger cylinder bore size should be considered.

NOTE: Additional force may be required to obtain the necessary acceleration for vertical or horizontal loads.

3 DETERMINE COUPLING FORCE REQUIREMENTS

Use the following formula:

$F = .013 \times \text{Weight} \times \text{Velocity}^2$

Calculated value must be less than the Magnetic Coupling Strength values.
(page MG_04)

4 DETERMINE INTERNAL CUSHION CAPACITY

- Consult the Cushion Data chart for the model selected. The velocities listed on the cushion charts are final or cushion impact velocities. On applications where the internal cushions or bumpers are to be used, be sure the actual, final or impact velocity is known. If the velocity is not known, use of limit switches with valve deceleration circuits or shock absorbers should be considered.

Cross-reference the final velocity and weight of the load. If the intersection is below the diagonal lines, the internal cushions on the actuator may be used. If the point falls above the dashed diagonal line or if the velocity is not known, use deceleration circuits, external shock absorbers or select a larger cylinder with greater cushion capacity. On high-cyclic applications, use of external stops is strongly recommended.

NOTE: Magnetically coupled cylinders do not have internal cushions. Heavier loads require external stops or shock absorbers.

Air-Oil Systems, Inc. www.airoil.com

PROVIDING LOAD GUIDANCE AND SUPPORT

1 COMPILE APPLICATION REQUIREMENTS

To determine the appropriate Magnetically Coupled Slide for an application, compile the following information:

- Available pressure (PSI)
- Weight of load (lbs. or kgs.)
- Orientation of load (lbs. or kgs.)
- Velocity of load (in./sec. or mm/sec.)
- Stroke length (in. or mm)

2 SELECT CYLINDER SIZE

- Consult the Theoretical Force vs. Pressure charts.
- Cross-reference the load force (or load weight if force is not known) and the available operating pressure. If the intersection falls below the diagonal line, and if moments do not exceed maximum values listed for that model (see Step 3), the actuator will accommodate the application. If the intersection is above the diagonal line, a larger cylinder bore size should be considered.

NOTE: Additional force may be required to obtain the necessary acceleration for vertical or horizontal loads.

3 KEEP UNDER MAXIMUM STROKE LENGTH

There are specific maximum stroke lengths for each model.
MGS038: 30.00”
MGS062: 37.00”
MGS100: 55.00”

4 DETERMINE NATURE OF LOAD AND THE EFFECT OF BENDING MOMENTS

If the actuator will guide and support a load located directly over the center of carrier, bending moments will not be a factor in the actuator selection. Magnetically Coupled Slides perform best that way. See the Bending Moments Formulae below if your application requires the load to be away from center of the carrier.

5 DETERMINE THE BEARING ROD LOAD CAPACITY

Determine whether the Load Weight and Stroke Length will be within the load capacity for the bearing rods.

Cross reference the load weight and stroke on the Load Weight vs. Stroke chart for the selected bore size. (Page MG_6) If the intersection falls below the curve, the cylinder will accommodate the application requirements. If the intersection falls outside the curve, consult the chart of a larger bore size that will accommodate the required load weight and stroke for your application.

The weight on the bearing rods causes them to bend or deflect slightly over their length. This deflection is increased for longer rods and/or higher weights on the bearing block. For proper operation, rod deflection must not exceed .30".

6 DETERMINE COUPLING FORCE REQUIRED

- Consult the Mag Coupling Strength chart (page MG_6). If the load value is less than the coupling force for the chosen actuator, it may be used for the application. If the load value is greater than the coupling force for the chosen actuator, select a larger actuator.

7 DETERMINE INTERNAL BUMPER CAPACITY

- Consult the Cushion Data chart (Bumper Data for Magnetically Coupled Slides page MG_14) for the model selected. The velocities listed on the cushion charts are final or cushion impact velocities. On applications where internal bumpers are to be used, be sure the actual, final or impact velocity is known. If the velocity is not known, use of limit switches with valve deceleration circuits or shock absorbers should be considered.

Air Oil Systems Inc www.airoil.com

BENDING MOMENTS
Loading Equation Data

MODEL	BORE SIZE	A (in.)	D (in.)	F (lbs.)	G (lbs.)
MGS038	3/8"	1.44	1.13	14.00	11.00
MGS062	5/8"	1.94	1.50	40.00	32.00
MGS100	1"	2.62	2.00	90.00	72.00

*(See **MGS Load vs Stroke** graph on page MG_6)*

“L” MOMENT

$$L = \frac{W}{2}$$

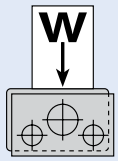

“Mx” MOMENT

$$L = \frac{WB}{A}$$

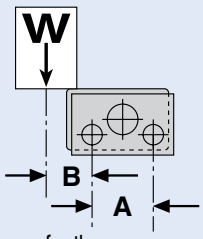

“My” / “Mz” MOMENT

$$F \text{ or } G = 2L = \frac{WB}{D}$$

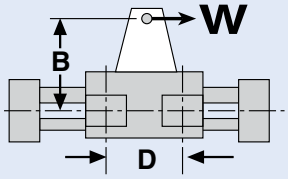

L should be below curve for the corresponding slide on the “Load vs. Stroke” chart (for sintered bronze or linear bearings - Mag Coupled Slides).

Loading Equation Key

A = Distance between shaft centers
B = Distance from load center to center of nearest shaft (in.); determined by application
L = Load per shaft (lbs.)
W = Payload weight (lbs.)
D = Axial distance between center of bearings (in.)
F = Max. bearing sliding load (linear bearings) (lbs.)
G = Max. bearing sliding load (sintered bronze bearings) (lbs.)

Application Guidelines

The following conditional statements are intended as general guidelines for use of Tolomatic actuators. Since all applications have their own specific operating requirements, consult Tolomatic, Inc. or your local Tolomatic distributor if an application is unconventional or if questions arise regarding the selection process.

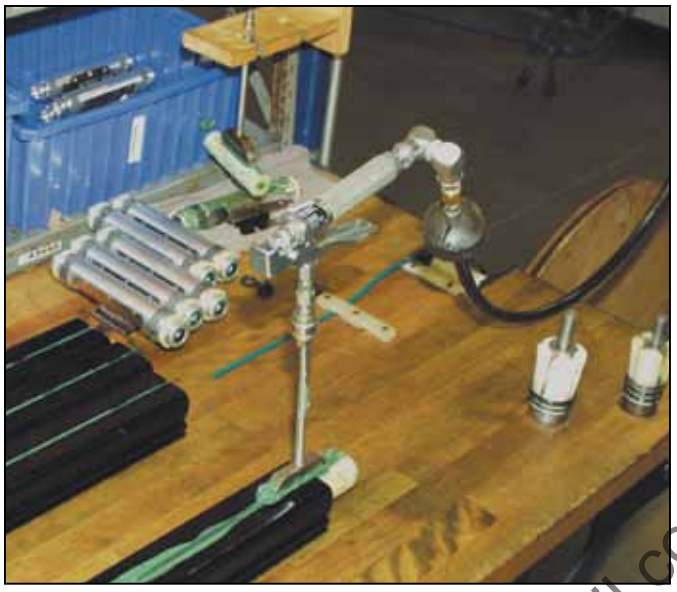

LUBRICATION GUIDELINES

All Tolomatic actuators (except Cable Cylinders) are prelubricated at the factory. To ensure maximum actuator life, the following guidelines should be followed.

- **Filtration**

  We recommend the use of dry, filtered air in our products. "Filtered air" means a level of 10 Micron or less. "Dry" means air should be free of appreciable amounts of moisture. Regular maintenance of installed filters will generally keep excess moisture in check.

- **External Lubricators (optional)**

  The factory prelubrication of Tolomatic actuators will provide optimal performance without the use of external lubrication. However, external lubricators can further extend service life of pneumatic actuators if the supply is kept constant.

  Oil lubricators, (mist or drop) should supply a minimum of 1 drop per 20 standard cubic feet per minute to the cylinder. As a rule of thumb, double that rate if water in the system is suspected. Demanding conditions may require more lubricant.

  If lubricators are used, we recommend a non-detergent, 20cP @ 140˚F 10-weight lubricant. Optimum conditions for standard cylinder operation are +32˚ to +150˚F (+0˚ to 65.5˚C).

  NOTE: Use of external lubricators may wash away the factory installed lubrication. External lubricants must be maintained in a constant supply or the results will be a dry actuator prone to premature wear.

- **Sanitary Environments**

  Oil mist lubricators must dispense "Food Grade" lubricants to the air supply. Use fluids with ORAL LD50 toxicity ratings of 35 or higher such as Multitherm® PG-1 or equivalent. Demanding conditions can require a review of the application.

Air-Oil Systems, Inc. www.airoil.com

FINAL VELOCITY CALCULATION

Velocity calculations for all rodless cylinders need to differentiate between final velocity and average velocity. For example: Stroking a 100-inch BC3 model in one second yields an average velocity of 100 inches per second. To properly determine the inertial forces for cushioning, it is important to know the final (or impact) velocity. Rodless cylinders accelerate and decelerate at each end of the stroke. Therefore this acceleration must be considered (see diagram).

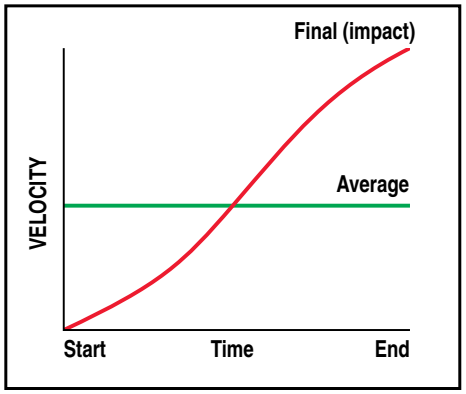

If final (or impact) velocity cannot be calculated directly, a reasonable guideline is to use 2 x average velocity.

MG Ordering - ALL Sizes

MODEL, BORE, STROKE | **OPTIONS**

MGC 062 SK58.250 FM2 FL BM2

MODEL & MAG COUPLING

MGA	Low coupling strength mag coupled cylinder
MGB	Medium coupling strength mag coupled cylinder
MGC	High coupling strength mag coupled cylinder

BORE SIZE

025	0.25"	*(6.4mm)*
038	0.375"	*(9.5mm)*
062	0.625"	*(16mm)*
100	1.00"	*(25mm)*

STROKE LENGTH

SK_._._ Enter desired stroke length in decimal inches

MAXIMUM STROKE

SIZE	MG_ in	MG_ mm
025	26.00	*660.4*
038	32.00	*812.8*
062	60.00	*1,524.0*
100	80.00	*2,032.0*

FOOT MOUNT *(MG_8)*

FM_ Foot Mount & number required (1 or 2)

FLOATING MOUNT *(MG_9)*

FL Floating Mount Bracket

SWITCHES *(MG_10)*

TYPE		QUICK-DISCONNECT	CODE	QUANTITY	LEAD LENGTH
REED	Form A	QD	**RM**	After code enter quantity desired	5 meters
		no	**RT**		
	Form C	QD	**BM**		
		no	**BT**		
HALL-EFFECT	Sinking	QD	**KM**		
		no	**KT**		
	Sourcing	QD	**TM**		
		no	**TT**		
TRIAC		QD	**CM**		
		no	**CT**		

Air-Oil Systems, Inc. www.airoil.com

MG Service Parts Ordering - ALL Sizes

PART NUMBER ORDERING (No Mounting Hardware or FE conn. included)		CONFIG. CODE ORDERING (Mounting Hardware & FE conn. included)
PART NO.	**DESCRIPTION**	**CODE**
3600-9084	Switch Only, Reed, Form C, 5m	BT
3600-9085	Switch Only, Reed, Form C, Male Conn.	BM
3600-9082	Switch Only, Reed, Form A, 5m	RT
3600-9083	Switch Only, Reed, Form A, Male Conn.	RM
3600-9086	Switch Only, Triac, 5m	CT
3600-9087	Switch Only, Triac, Male Conn.	CM
3600-9090	Switch Only, Hall-effect, Sinking, 5m	KT
3600-9091	Switch Only, Hall-effect, Sinking, Male Conn.	KM
3600-9088	Switch Only, Hall-effect, Sourcing, 5m	TT
3600-9089	Switch Only, Hall-effect, Sourcing, Male Conn.	TM
2503-1025	Connector (Female) 5 meter lead	

NOTE: When ordered by Config. Code Female connector & all mounting hardware is included

Switch Ordering NOTES:

To order field retrofit switch and hardware kits for all Tolomatic actuators: SW (Then the model and bore size, and type of switch required)
Example: SWMGC062RT
(Hardware and Form A Reed switch with 5 meter lead for 0.625" bore Mag coupled cylinder)

Mounting hardware is required if replacing switch for any actuator manufactured before 7/1/97

SIZE	025	038	062	100
Floating Mount Kit	2402-9005	2403-9005	2406-9005	2410-9005
Foot Mount Kit[1]	2402-9011	2402-9011	2402-9011	2410-9011
Switch Hardware	2402-9999	2402-9999	2402-9999	2402-9999

Service Parts Ordering NOTES:

1 Foot Mount Kit contains two (2) brackets.

_ = numeric entry required

MGS Ordering - ALL Sizes

MODEL, BORE, STROKE | **OPTIONS**

MGS 062 SK28.250 SL2 BM2

MODEL

MGS	Mag coupled slide

BORE SIZE

038	0.375" *(9.5mm)*
062	0.625" *(16mm)*
100	1.00" *(25mm)*

STROKE LENGTH

SK_._._ Enter desired stroke length in decimal inches

MAXIMUM STROKE

SIZE	MG_ in	MG_ mm
038	30.00	*762.0*
062	37.00	*939.8*
100	55.00	*1,397.0*

PROXIMITY SENSOR *(MG_12)*

NP_	Sinking type proximity sensor (NPN)
PN_	Sourcing type proximity sensor (PNP)

SHOCK ABSORBERS *(MG_13)*

SL_	Light duty shock absorber
SH_	Heavy duty shock absorber

SWITCHES *(MG_10)*

TYPE		QUICK-DISCONNECT	CODE	QUANTITY	LEAD LENGTH
REED	Form A	QD	RM	After code enter quantity desired	5 meters
		no	RT		
	Form C	QD	BM		
		no	BT		
HALL EFFECT	Sinking	QD	KM		
		no	KT		
	Sourcing	QD	TM		
		no	TT		
TRIAC		QD	CM		
		no	CT		

MGS Service Parts Ordering - ALL Sizes

PART NUMBER ORDERING No Mounting Hardware or FE conn. included		CONFIG. CODE ORDERING Mounting Hardware & FE conn. included
PART NO.	**DESCRIPTION**	**CODE**
3600-9084	Switch Only, Reed, Form C, 5m	BT
3600-9085	Switch Only, Reed, Form C, Male Conn.	BM
3600-9082	Switch Only, Reed, Form A, 5m	RT
3600-9083	Switch Only, Reed, Form A, Male Conn.	RM
3600-9086	Switch Only, Triac, 5m	CT
3600-9087	Switch Only, Triac, Male Conn.	CM
3600-9090	Switch Only, Hall-effect, Sinking, 5m	KT
3600-9091	Switch Only, Hall-effect, Sinking, Male Conn.	KM
3600-9088	Switch Only, Hall-effect, Sourcing, 5m	TT
3600-9089	Switch Only, Hall-effect, Sourcing, Male Conn.	TM
2503-1025	Connector (Female) 5 meter lead	

NOTE: When ordered by Config. Code Female connector & all mounting hardware is included

SIZE	038	062	100
Shock Absorbers Light Duty	2403-1062	2406-1063	0910-1479
Shock Absorbers Heavy Duty	0605-1006	2406-1062	0910-1480
NPN Sinking Proximity Sensor	2410-1048	2410-1048	2410-1048
PNP Sourcing Proximity Sensor	2410-1053	2410-1053	2410-1053
Switch Rail	2403-8888	2406-8888	2410-8888
Magnet	2410-9020	2410-9020	2410-9020

Switch Ordering NOTES:

To order field retrofit switch and hardware kits for all Tolomatic actuators: SW (Then the model and bore size, and type of switch required)
Example: SWMGS062RT
(Hardware and Form A Reed switch with 5 meter lead for 0.625" bore Mag coupled slide)

Mounting hardware is required if replacing switch for any actuator manufactured before 7/1/97

Air-Oil Systems, Inc. www.airoil.com